BELCAR ENDURANCE CHAMPIONSHIP 2025

TECHNICAL REGULATIONS

PAGE INDEX

Art 1. DEFINITION – DESCRIPTION 2

Art 2. REGULATIONS 3

Art 3. BODYWORK AND OTHER EXTERNAL DIMENSIONS 10

Art. 4 WEIGHT 20

Art. 5 ENGINE 23

Art 6. FUEL LINES, FUEL PUMPS AND FUEL TANKS 27

Art 7. LUBRICATION SYSTEM 31

Art 8. ELECTRICAL EQUIPMENT 32

Art 9. TRANSMISSION 34

Art 10. SUSPENSION AND STEERING MECHANISM 37

Art 11. BRAKES 38

Art 12. WHEELS AND TIRES 40

Art 13. COCKPIT 42

Art 14. SAFETY EQUIPMENT 44

Art 15. SAFETY STRUCTURE 47

Art 16. FUEL 48

Art 17. CURRENT TEXT 48

Art 18. APPROVAL 48

DRAWINGS
APPENDIX 1 : VT2 CARS AND WEIGHTS

VZW Terlamen/Circuit Zolder is the promoter of the Belcar Endurance Championship in accordance with the regulations of the International Sporting Code of the FIA, the sporting rules of RACB sport, the current regulation and possibly the additional (special) regulation, to which all participants must submit through their participation. Every member of a participating team must take note of the full content of the current regulation.

Art. 1 DEFINITION – DESCRIPTION

A race car for the Belcar Endurance Championship is defined by RACB Sport, in agreement with the promoter. This car is suitable for sporting purposes and has at least one exit on each side. The base model has to be homologated for the public road or homologated for races by the FIA or by an ASN.

GT racing car

The model used as the basis for the race car must come directly from a series model (road car) which complies with the following criteria:

Car designed for sport, with 2 doors, 2 or 2+2 seats (as declared for the road car type approval), closed, with one or more closed luggage compartment, which can be used perfectly legally on the open road and is available for sale through the dealer network of a manufacturer recognised by the FIA.

- Road car with an aptitude for sport regularly produced and marketed.
- Not homologated in FIA Group A or Group N
- EC "Full type" road homologation (or equivalent in the United States or Japan).
- Minimum production of 300 units in 24 months as from the first day of production.

Mounting of the suspension parts on mechanical components (engine, gearbox…) is forbidden.

Touring racing car

The model used as the basis for the race car must comply with the homologation criteria of one of the FIA homologation regulation texts (including the criteria for cockpit dimensions of the homologation regulations for Group A cars), have at least 4 seats (excluding 2+2) and their original structure (chassis / bodyshell) must remain identifiable at any time.

Silhouette-type cars

Cars based on a tubular chassis with the appearance of a large production road car (Touring or GT) with at least 2 seats.

Silhouette cars are subject to prior approval by RACB Sport.

T	S	GT	Applicable text
x			Applicable text for Touring cars
	x		Applicable text for cars of the type Silhouette
		x	Applicable text for GT cars

Art. 2 REGULATIONS

2.1 Role of RACB Sport

The technical regulations of the Belcar Endurance Championship are issued by RACB Sport, in agreement with the promoter.

2.2 Authorised modifications

Every construction or modification not authorised by the Technical Regulations Belcar Endurance Championship is expressly prohibited. An authorised modification cannot lead to an unauthorised modification.

2.3 Authorised cars

Participation in the Belcar Endurance Championship is reserved for vehicles that are conform to the technical regulations of the Belcar Endurance Championship and are divided into :

- **Class 1 – Grand Touring Cup**
- **Class 2 – Grand Touring Sport**
- **Class 3 – Super Sport**
- **Class 4 – Club Sport**
- **Class 5 – Club Challenge**

In case of contradictions between the technical regulations of the « Belcar Endurance Championship » and the « Porsche Endurance Trophy Benelux », the regulations of the « Porsche Endurance Trophy Benelux » will be followed for the Porsche cars.

Class 1 – Grand Touring Cup

Class 1 cars may be subject to a BOP established by RACB Sport and the promoter.

- **Porsche 911 GT3 Cup cars**

Porsche cars authorised by the Porsche Endurance Trophy Benelux and fully compliant to the Porsche Endurance Trophy Benelux regulations.

In case of contradictions between the technical regulations of the « Belcar Endurance Championship » and the « Porsche Endurance Trophy Benelux », the regulations of the «Porsche Endurance Trophy Benelux» will be followed for the Porsche cars.

- **GT Cup cars > 3300 cm³**

Cars of the type GT that compete in mono-brand competitions, with a modified cylinder capacity of more than 3300 cm³, accepted by RACB Sport and the promoter, with a safety equipment conform to 2022 Art 253 of FIA Appendix J or higher if required in these technical regulations. The technical definition needs to be in conformity with the cup regulations.

If the car no longer meets the specifications of the cup, it can be accepted by RACB Sport and the promoter based on a technical report (to be send to the promoter). In this case, the minimum weight of every other performance element can be adjusted and this by decision of RACB Sport in agreement with the promoter.

The sole exceptions that are allowed to these specifications, are:

- Freedom of brand and type of rims, with respect for the data included in the homologation form
- Safety cage with FIA or ASN homologation, with respect for the data included in the homologation form
- Freedom of brake discs

- **GTC Open**

Cars ~~of the type GT~~ accepted by both RACB and the promoter after introduction and approval of a technical report based on the following technical regulations. Example of an approved chassis by the RACB: Marcos Mantis, Ginetta G50, Audi R8, Chevron GR8.
Homologated cars must remain fully conform to their homologation (ex: GT2 homologation).

- **FIA GT3 cars with expired homologation or expiring in the current year**

GT3 cars with expired homologation or GT3 cars with homologation expiring in the current year.
All GT3 cars must remain fully confirm to their FIA homologation.

- **Silhouette Pro and Pro Evo**

A 'Silhouette' is a car that uses a tube chassis with a touring bodywork belonging to a brand included in the list of touring cars that have been homologated by the FIA or approved by RACB Sport. Every participant is obliged to include the origin of the chassis in the passport of his car.

All Silhouette cars must meet the safety requirements of FIA Appendix J – Article 277 for Category II-SH cars.

The Silhouette Pro is a car of the type 'Silhouette' with a chassis included in the list mentioned below and equipped with an atmospheric V6 engine.

- Tube chassis of the type Silhouette, berlines, coupés with 4 seats and 2+2, as used in the French FFSA Supertourism championship 2001-2005.
- Silhouette Solution F TC06.
- Silhouette Solution F TC10.
- Silhouette Gomez Competition GC10.
- Silhouette Renault Megane Trophy.
- Other chassis approved by RACB Sport.

The Silhouette Pro Evo is a car of the type 'Silhouette' with a chassis included in the list below and equipped with an atmospheric V8 engine.

- Tube chassis of the type Silhouette, berlines, coupés with 4 seats and 2+2, as used in the French FFSA Supertourism Championship 2001-2005.
  - Silhouette Solution F TC06.
  - Silhouette Solution F TC10.
  - Silhouette Gomez Competition GC10.
  - Silhouette Renault Megane Trophy.
- Other chassis approved by RACB Sport (e.g. Transam, MARC Cars, …).

Vehicles based on modified GT1 and GT2 cars (until 2011), as well as GT3 cars with a valid homologation expiring later than current year, are not allowed.

Class 2 – Grand Touring Sport

Class 2 cars may be subject to a BOP established by RACB Sport and the promoter.

- **Porsche Cayman Cup cars**

Porsche cars authorised by the Porsche Endurance Trophy Benelux and fully compliant to the Porsche Endurance Trophy Benelux regulations.

In case of contradictions between the technical regulations of the «Belcar Endurance Championship» and the «Porsche Endurance Trophy Benelux», the regulations of the «Porsche Endurance Trophy Benelux» will be followed for the Porsche cars.

- **GT4 cars**

Every car of the type GT4 needs to be in conformity with its homologation form and will be part of a prior application to RACB Sport for approval.

- **Silhouette Light**

A 'Silhouette' is a car that uses a tube chassis with a touring bodywork belonging to a brand included in the list of touring cars that have been homologated by the FIA or approved by RACB Sport. Every participant is obliged to mention the origin of the chassis in the passport of the car.

All Silhouette cars must meet the safety requirements of FIA Appendix J – Article 277 for Category II-SH cars.

Cars of the type 'Silhouette' with a chassis included in the list below and equipped with a full series V6 engine of max. 3,5L, conform to the homologation file B-2007-03 (Solution F TC06), conform to the technical regulations or conform to the Renault Megane Trophy version 2004 (plenum not 'birthday').

For every Silhouette using a VQ35 (Nissan) or V4Y (Renault) engine, or one of their derivatives, a brace of max. 20 mm can be installed between the lowest part (ref: 14010-AM61A or 14010-AC80A or 14010-AC805) and the upper part (ref: 14010-CD000 or 14010-CD00A). It is allowed to turn the upper plenum part in order to change the position of the butterfly box. The shape of the oil sump can be chosen freely, but the principal of the lubrication system needs to be preserved.

- Tube chassis of the type Silhouette, berlines, coupés with 4 seats and 2+2, as used in the French FFSA Supertourism Championship 2001-2005.
- Silhouette Solution F TC06
- Silhouette Solution F TC10
- Silhouette Gomez Competition GC10
- Silhouette Renault Megane Trophy
- Other chassis approved by RACB Sport

The class Silhouette Light is also available to:

- Peugeot RC Diester Cup 2004-2009
- Roadster Cup conform to its homologation form
- Silhouette 'BRL Light' in conformity with its homologation form RACMSA 1660 and in conformity with the regulation BRL Light 2008
- Saker RAPX with 2000cc Subaru turbo engine
- Other chassis approved by RACB Sport

- **GTS Open**

Cars of the type GT with a corrected cylinder capacity of less than 2000 cc, and other Silhouette of Touring cars accepted by both RACB and the promoter after introduction and approval of a technical report based on the following technical regulations.

Class 3 – Super Sport

- **Touring cars > 4000 cc**

Cars of the type Touring with a corrected cylinder capacity of more than 4000 cc, accepted after introduction and approval of a technical report based on the following technical regulations.

- **Touring cars between 2800 cc and 4000 cc**

Cars of the type Touring with a corrected cylinder capacity of less than 4000 cc and more than 2800 cc accepted after introduction and approval of a technical report based on the following technical regulations.

- **TCR cars**

Homologated TCR Touring cars equipped with a 1.6L or 2.0L turbo engine, conform to their TCR homologation.
Competitors must be in possession of the homologation of the car.

In the Belcar Endurance Championship, the use of cars that come from TCR regulations is only possible with a prior agreement by the WSC Ltd, the owner of the TCR concept.

For every other model of touring cars, equipped with a turbo engine of max. 2.0l without technical report given by the WSC Ltd, the candidate needs to send an application to RACB Sport, with a request for a RACB Belcar Technical Passport, minimum 4 weeks before the race.

- **SS Open**

Cars of the type GT, Touring or Silhouette accepted by both RACB and the promoter after introduction and approval of a technical report based on the following technical regulations.

- **SILHOUETTE CUP**

Cars of the type 'Silhouette' with a chassis included in the list below:
- Ligier JS2R & JS2R Evo
- Lamera Cup

The cars must be conform to their original technical definition, their homologation file and the technical regulations of their respective original Cup or Championship. They must also be conform to safety requirements of FIA Appendix J – Article 277 for Category II-SH cars.

Class 4 – Club Sport

- **Touring cars >2500 cc and < 2800 cc**

Cars of the type Touring with a corrected cylinder capacity of more than 2500 cc and up to 2800cc, accepted after introduction and approval of a technical report based on the following technical regulations.

- **NLS VT2 Class cars**

Cars of the type touring with a turbo engine of max 2000 cc, fully complying with current VLN/NLS VT2 class technical regulations without additional modification, equipped with an ASN-certified/homologated safety cage and accepted after introduction and approval of a technical report based on the following technical regulations. The list of approved cars in Class VT2 is available in Appendix 1 of these regulations. Cars must be in conformity with the weights table in Appendix 1 of these regulations.

- **CS Open**

Cars of the type GT, Touring or Silhouette accepted by both RACB and the promoter after introduction and approval of a technical report based on the following technical regulations.

Class 5 – Club Challenge

- **Touring & GT cars <2500 cc**

Cars of the type Touring or GT with a corrected cylinder capacity of less than (or equal to) 2500cc, accepted after introduction and approval of a technical report based on the following technical regulations.

- **CC Open**

Cars of the type GT, Touring of Silhouette accepted by both RACB and the promoter after introduction and approval of a technical report based on the following technical regulations.

VARIA

- RACB Sport reserves the right to, in agreement with the promoter, change the Belcar class of a car if they deem this change necessary.
- RACB Sport reserves the right to, in agreement with the promoter, impose a technical element on a car (ballast, restrictor, height of the bodywork…) in order to slow it down, if necessary.

2.4 Dating of the regulation

This Technical Regulation will immediately enter into force (see date of approval at the bottom of this document). From that date, it replaces and cancels all prior Technical Regulations.

A change to the regulation concerning safety, issued by the FIA, will be applicable starting from the next meeting.

2.5 Passport of the vehicle and technical race passport

All cars participating in a Belcar Endurance event must have a National Technical Passport and present it at the initial scrutineering. A technical passport is not a homologation form.

It is the assignment of the team leader or owner of the vehicle to, before the closing date of the first meeting, send the complete passport of the vehicle to the promoter by mail.

If the passport of a vehicle is not or incompletely filled in, the car can be refused for the meeting.
If, during the season, a team leader or owner wishes to present a change to the technical data included in the passport of the vehicle, he needs to do so in a written way or by email to RACB Sport, and this at least 14 calendar days before the start of the meeting.

RACB Sport reserves the right to accept or deny this change if it does not answer to the spirit of the regulation and if it excessively increases the performances and/or preparation and exploitation costs of the vehicle, even if not explicitly forbidden.

The participant needs to request a National technical Passport at least 2 weeks before his registration to the first race he will attend (Passport request procedure is available on RACB website).

This document needs to accompany the car during every meeting. During the technical check, this document needs to be presented. Technical comments can be noted on this document. The absence of this document during the technical check or the deliberate falsification of this document will be considered as fraud and can be punished with a financial penalty of € 150.

2.6 Conformity of the regulations

During a meeting, the team leader or the owner of the car needs to ensure that his car meets all regulations that are applicable to his car. (sporting regulation, technical regulation, homologation form, technical race passport, etc.):
In order to determine the conformity, both participant and RACB Sport can appeal to the technical data of the constructor, as well as to other official data of the sportive authority.
Requests for new homologations or extension of homologations for the season 2022, need to be transmitted to RACB Sport.

Every modification that does not meet the spirit of the regulation, even if not explicitly forbidden, but that could excessively raise the reparation costs of a car, is without prior warning forbidden by the Technical Commission of RACB Sport.
A car of which the construction and/or modification can include risks, cannot sign up nor participate and this without prior warning.
A car of which the construction can bring possible dangers, can be excluded by the College of Sports Commissioners of RACB Sport, on advice of the Technical Commission.

2.7 General statements

Articles 251, 252, 253, 257(2011) and 277 of current Annex J of the FIA remain applicable, but the articles of the current regulation are decisive.

Every bolt, nut or screw of the car can be replaced by another bolt, nut or screw on the condition that it is of the same material family, the same diameter or bigger than the original part and contains a blocking method (ring, counter nut).

<u>Materials</u>
For the mechanical parts, chemical or thermal treatments are allowed, on the condition that the weight and dimensions are maintained as mentioned on the homologation form or on the technical document of RACB Sport.

The following materials are forbidden: magnesium (except for the rims), ceramic and titanium (only if original), except as stated in art. 5.2.1. of this regulation.

The use of composition materials is allowed within the limits of this regulation.

The used material for the bodywork elements (trunk lid and engine compartment, bumpers, doors and wings) is limited to glass fibre, but in case an element is being replaced, it needs to be fixed at least as solid as the original element.

2.8 Telemetry

Data transmission departing from a car moving towards the pit box is allowed.

A pulse generator that releases data about timekeeping is allowed, on the condition that these generators form separate units and that they have no connection with the control unit of the engine.

2.9 Electronics

A control system of the traction is forbidden, except for GT cars that have been homologated with this system.
If the engine electrical control unit has a traction control system, it cannot be activated. It is the task of the participant to show that this function has not been activated and has been decommissioned.
The RACB Sport can impose the rule that a vehicle can only be equipped with one sensor measuring the speed of the wheel revolution.

2.10 Technical check

Before the start of a meeting, the technical scrutineers will indicate the place for the check of the height of the car and the weighing. It is the task of the participant to inform himself about the place of the check.
Before every meeting, during the technical check, a participant can adapt the tire pressure to max. 1,5 bar if the pressure is lower.
Within the time period of the check, imposed by the organisers, the participant has the possibility to ensure himself of the conformity of his car, using the equipment of the official check, at the place of the official check.

Art 3. BODYWORK AND OTHER EXTERNAL DIMENSIONS

3.1 Dimensions

T	S	GT	Dimensions
x	x	x	All bodywork dimensions and –shapes need to remain original, except for the required or authorised modifications included in the following articles. The maximum length needs to respect the length of the production model, with an authorised deviation of 25 mm and with the exception of the regulations in article 3.4.3. The maximum width (rear-view mirrors not included) is 2000 mm, except for homologated racing cars or cars of which a copy registered for road traffic exceeds this width, in which case the original width needs to be maintained.
x		x	For homologated racing cars, the bodywork needs to be in conformity with the homologation form. For the GT Cup cars, the bodywork needs to be in conformity with the homologation form and the Cup regulation.

3.2 Doors

T	S	GT	Doors
x		x	The dimensions and functions of the original car doors need to be preserved. If a door has been replaced by a door in glass fibre, the security cage needs to be equipped with at least a lateral protection 'X' (drawing 253-9) in conformity with the valid FIA regulations of Article 253-8.
	x		The doors can be shortened at their lowest side, without hindering the evacuation of a pilot. This can be done in order to create a better adaptation with the bottom of the car in case the car has been raised.
x	x	x	The front doors must be able to open without using tools and this both from the inside and from the outside.
x	x	x	It is allowed to change the original hinges and latches of the doors with the sole purpose of offering the pilot a quicker evacuation in case of an accident. The interior lining of the doors cannot be removed. The interior lining can remain original or can be made of metal plates with a minimum thickness of 0,5 mm or be made of carbon fibre with a minimum thickness of 1 mm or be made of another solid material with a minimum thickness of 2 mm.

3.3 Windshield and windows / screens

T	S	GT	Windshield and windows / screens
x	x	x	A one-piece windshield in laminated glass, homologated for road use, or in polycarbonate is mandatory. The thickness of the windshield in laminated glass needs to be at least 4,5 mm and in polycarbonate at least 6 mm. The original windshield can be replaced by a windshield made of laminated glass with the same shape and dimensions and equipped with an integrated demisting system. Security fastenings can be used on the condition that they do not improve the aerodynamic qualities of the car. It is allowed to apply maximum 4 transparent films on the outer surface of the windshield in order to protect it. The side and rear windows can be replaced by polycarbonate, with a minimum thickness of 3 mm.
	x		A derogation for the use of a windshield that originates from the brand touring car or from a different model, can be obtained.
x	x	x	The view in all directions needs to be preserved at all times. It needs to be possible to see the complete interior of the car from the outside. The side windows need to remain clear. The names of the pilots, the national flag of the pilots and possibly the by the organiser obliged publicity need to be applied on the side windows in white letters (type Arial Bold) with a minimum height of 5 cm. On the rear window, only a tape of 8 cm can be applied.

			In case the side and rear windows are made out of glass, it is obliged to apply a transparent, colourless safety film (e.g. SL Lumar Safety Film/D1570) of maximum 0,1 mm at the inside in order to guarantee an effective protection in case of fragmentation. The same film is recommended for the exterior rear-view mirrors. All side windows need to remain closed for ¾ during trainings and races. The installation of a safety net at the pilot's side is recommended. Darkening of the rear window (colour film or obscuration band) is not allowed. The windows of the car need to remain free of publicity, with the exception of a band/film with a maximum width of 10 cm on the upper part of the windshield and, if the rearward visibility is preserved, a band/film with a maximum width of 8 cm on the rear window. On the windshield, only the by the promoter obliged publicity (banner) and a miniaturised race number (far right corner with a height of 100 mm) can be applied. <u>Cockpit ventilation</u> In order to ventilate the cockpit, the rear and side windows can have 5 circular holes with a maximum diameter of 50 mm each. The ventilation opening can be installed on every door window, as long as it complies with the following rules: • It cannot exceed the outline of the window, has a maximum height of 150 mm and cannot be placed more than 50 mm from the window's surface. • It needs to be made from the same material as the window itself or be made from transparent polycarbonate. • It cannot hinder the rear view of the pilot. Air ducts powered by a ventilation hole are allowed in the cockpit, provided that they do not hinder the view and the safety of the pilot. <u>Net</u> The door windows can be replaced by nets of which the characteristics are in conformity with the FIA norm article 253-11. The net must consist of woven strips with a minimum width of 19 mm (3/4"). The mesh size is minimum 25 mm x 25 mm and maximum 60 mm x 60 mm. The woven strips must be made of fireproof material and the crossing points need to be stitched together. The net cannot be of a provisional nature. The net must be fixed to the safety cage or to a fixed part of the bodywork above the door window using a quick release system that also functions in a rollover situation. It needs to be possible to detach the net using only one hand. A system using a push-button is allowed, provided that it is in conformity with the regulations of this article. The push-buttons need to be visible from the outside, have a striking colour and be marked with 'PRESS'. For the fastening of the nets to the safety cage, only screwable fastenings are allowed. Every change to the safety cage itself is not allowed.

3.4 Bodywork

T	S	GT	Bodywork
x	x	x	Bodywork: All entirely hung parts of the car that are touched by the outside air stream, with the exception of parts that are undoubtedly linked to the mechanical functioning of the engine, the transmission and the suspension. Every air intake is considered to be part of the bodywork.
	x		The material used for the bodywork is limited to glass fibre, but in case of a replacement of an element, it needs to be fixed in the most solid way possible, just like the original method. The use of composite elements in carbon/Kevlar is allowed in order to reinforce the tank of the driver and the fuel.
x		x	Under no circumstances, is it allowed to modify the chassis. In relation to the wheelbase, the chassis must maintain its original position. Modifications to the chassis are only allowed for the installation of a safety cage, providing that they comply with the regulations about safety cages, art. 15.1.
x	x	x	At any given moment during the use of the car on the racetrack, the bodywork parts need to remain in place.
x			No part of a Touring-type car and no elements hanging from the car, can be found within **65** mm of the ground.
	x		No part of a Silhouette-type car and no elements hanging from the car can be found within **55** mm of the ground.
		x	No part of a GT-type or GT Cup car and no elements hanging from the car can be found within **55** mm of the ground. For homologated racing cars, the height will be determined based upon the homologation form. The measuring shall take place at the homologated places.
x	x	x	If, during the meeting, the car was involved in an accident, the conformity of these values will be evaluated by the Technical Commission.
x	x	x	No system is allowed that can change this ground clearance while the car is in motion, or without external equipment.
x	x	x	RACB Sport, in agreement with the promoter, reserves the right to adapt the ground clearance of a car in order to increase equality of performances.

3.4.1 « Flat » bottom

T	S	GT	« flat » bottom
x	x		The use of a flat bottom is allowed. It consists solely of multiplex wood or concrete plex with a minimum thickness of 4 mm. If a flat bottom is installed, it has to comply with the description below. If it is not installed, the bottom of the car cannot be modified, but has to remain identical to that of a copy registered for road traffic, with the exception of holes that have the sole purpose of cooling the mechanical parts.
		x	The use of a flat bottom is allowed. If a flat bottom is installed, it needs to comply with the description below. If it is not installed, the bottom of the car cannot be modified, but has to remain identical to that of a copy registered for road traffic, with the exception of holes that have the sole purpose of cooling the mechanical parts.
x	x	x	In top-down view, from a vertical projection, the flat bottom cannot be visible.
x	x	x	Skirts (Jupes) are not allowed. Every dispositive or construction built completely or partially between the underbody of the car and the ground is strictly forbidden.

x	x	x	Between the vertical and the transversal surface, formed at the front of the complete front wheels and at least the wheel axle of the rear wheels, all the bodywork parts that are directly visible on the bottom of the car, with the exception of the wheel arches and the exhaust pipe, need to be described in a plan. This plan, also called Flat Bottom or Reference Surface, needs to be a unified, solid, hard and rigid surface (no level of freedom towards the unity chassis/bodywork). The perimeter of the surface described by these parts can be round up to a radius of maximum 25mm. In order to defeat possible manufacture difficulties, a tolerance of +/- 5 mm to this surface is allowed. No hanging part of the car is allowed under the flat bottom and no air flow may run over it. No air flow with aero dynamical effect is allowed between the bodywork and the flat bottom. The channelled air flows towards the air intakes or coming from the air outlets that run above any part of the flat bottom cannot result in a positive or negative air pressure. The part of the flat bottom between the axle of the front wheels and the vertical and transverse part formed at the front of the complete front wheels needs to have a minimum width of 1000mm.

3.4.2 « Rear Diffuser »

T	S	GT	« Rear Diffuser »
x		x	The use of a rear diffuser is possible. If a rear diffuser is installed, it must fully meet the following description or be homologated for the car. The installation of a dive plane at the end of the flat bottom is allowed: ▪ Between the vertical parts formed by the inner surface of the rear wheels. ▪ Between the rearmost point of the flat bottom and the vertical part formed by the extreme point of the bodywork. No part of the diffuser is allowed at 215 mm off the ground. Vertical flat shaped wedges are allowed if they remain parallel with the longitudinal centre line of the car. The maximum height of a gurney, installed on the diffuser, is 10 mm.

3.4.3 Front bottom panel

T	S	GT	Front bottom panel – Spoiler - Splitter
x	x	x	It is allowed to add a bottom panel between the front bumper and the front of the flat bottom, on the condition that it is flat or has been homologated.
x	x		The original front overhang can be enlarged by adding a spoiler (max. thickness: 30 mm).
x	x		The spoiler needs to remain within range of Template B, as described by the drawing below, and needs to respect Template A.

Template A

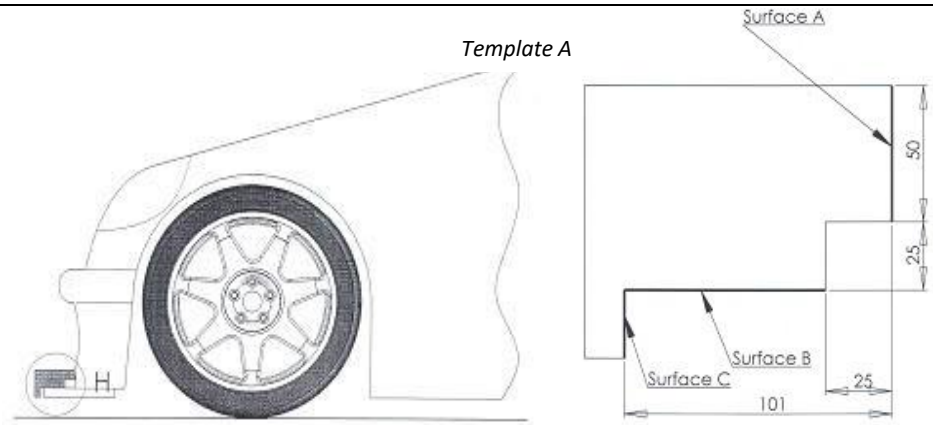

Template B

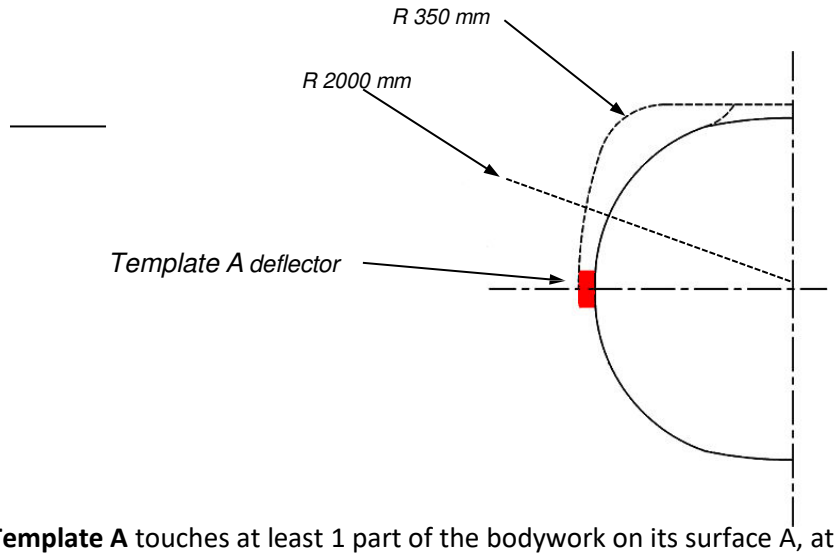

If **Template A** touches at least 1 part of the bodywork on its surface A, at a maximum of 25 cm of the longitudinal axis of the car , and with the total surface B on the spoiler, not a single part of surface C can touch the spoiler in this area (dimensions in mm).

In the front, every change to the original form of the bumpers cannot aim at extending the length of the spoiler.

Drawbars are allowed, but it needs to be possible to dismantle them before every technical check.

		X	The original front overhang can be extended by adding a spoiler (max. thickness: 30 mm) which needs to be placed within the template B ▪ of max 80 mm, if the original overhang is < 1000 mm ▪ of max 60mm, if the original overhang is equal to or > 1000mm and < 1100mm In frontal view, the spoiler cannot exceed the width of the race car, measured at the front wheel axle. A maximum of 2 aero dynamic elements can be added above the spoiler, on both sides of the car. These must be located: ▪ At the front of the vertical plane, tangent to the complete wheels. ▪ Within the perimeter of the spoiler, seen from above. ▪ With a constant thickness. ▪ Outside the original front of the car. ▪ Maximum 180 mm above the flat bottom. They cannot: ▪ Cover the headlights. ▪ Be wider than 200 mm.
	x		In front view, measured at the front wheel axle, the spoiler cannot exceed the width of the race car. A maximum of 2 aerodynamic elements can be added above the spoiler, at each side of the car. These must be located: ▪ At the front of the vertical plane, tangent to the complete wheels. ▪ Within the perimeter of the spoiler, seen from above. ▪ With a constant thickness. ▪ Outside the original front of the car. ▪ Maximum 350 mm above the underside of the front plane or the flat bottom if the car does not have a front plane. They cannot: ▪ Cover the headlights. ▪ Be wider than 250 mm. Adding 'dérives' on the splitter is not allowed.
x	**x**	**x**	If the car already has a splitter, but one that does not meet the mentioned specifications, it needs to be approved by RACB Sport.

3.4.4 Openings in the « flat bottom » and in the « rear diffuser »

T	S	GT	**Openings in the « flat bottom » and « rear diffuser »**
x	**x**	**x**	The sole openings allowed in the 'flat bottom' and 'rear diffuser' are: ▪ Cut-outs that serve the wheel movements. ▪ Hatches for maintenance purposes. ▪ Entry for pneumatic jacks. ▪ Exit for the overflow pipes of gasoline + relief valves oil ▪ Opening or recess for the evacuation of exhaust warmth ▪ Maximum 4 'NACA' air circulation holes for cooling, of which the total horizontal surface cannot exceed 360 cm²

3.4.5 Structure of the bodywork

T	S	GT	Structure of the bodywork
x	x	x	The bodywork must, in a vertical projection seen from above, cover all mechanical elements, with the exception of the bottom half of the complete wheels. Seen from the side and to the front, no part of an air intake can be located passed the highest point of the windshield except for homologated racing cars.
x	x	x	The car cannot have any protruding parts, sharp edges or sides. When the car is in motion, every part of the bodywork, aerodynamic parts included, must be firmly fixed to the chassis/bodywork of the car. These parts cannot have any level of freedom and must remain immobilised.
x		x	The original hood and trunk lid fasteners need to be removed and must be replaced by safety locks. If the original hinges of the hood are preserved, it suffices to install safety locks in the other 2 corners. If the original hinges of the hood and/or trunk lid are not preserved, safety locks need to be installed in all 4 corners. All safety locks need to be clearly marked with contrasting colours.
x	x	x	All bodywork seals in the vicinity of gasoline connections need to be designed in a way that leaks of gasoline to the engine compartment or the cockpit are avoided.

3.5 Additional changes to the bodywork and chassis

3.5.1 Maximum width

T	S	GT	Maximum width
x		x	The width of the bodywork at the front and rear wheel passage, can be widened with max. 100 mm on each side. The total width of the car cannot exceed the 2000 mm, with the exception of cars of which a copy registered for road traffic exceeds this width, in which case the original width needs to be maintained and homologated racing cars, which must be conform to their homologation.
	x		The width of the bodywork at the front and rear wheel passages can be widened. In all circumstances, the total width of the car cannot exceed 2000 mm.

3.5.2 Rear wing

T	S	GT	Rear wing
x	x	x	The assembly of a rear wing is allowed. It can replace the original wing but adding an additional rear wing is not allowed.
x			The complete wing unit cannot form the highest point of the bodywork (Gurney included), except if original or in the possession of a homologation for this car. The wing cannot exceed more than 330 mm past the most rear point of the car. Every change to or extension of the bodywork aimed at moving the wing to the back, is prohibited.

	x		**Silhouette PRO and PRO EVO :** The complete wing unit (Gurney included) cannot form the highest point of the bodywork, except if it has been homologated. If the car has an air intake through the roof, the intake will not be taken into account while determining the highest point of the roof. The highest and most accessible point will be used for the measuring. It cannot exceed the most rear point of the car. Every change to or extension of the bodywork, aimed at moving the wing to the back, is prohibited.
		x	The complete wing unit (gurney included) cannot form the highest point of the bodywork, except if it has been homologated. If the car has an air intake through the roof, the intake will not be taken into account while determining the highest point of the roof. The highest and most accessible point will be used for the measuring. The wing cannot exceed more than 330 mm past the most rear point of the car. Every change to or extension of the bodywork, aimed at moving the wing to the back, is prohibited.
x	x	x	The wing can only consist of one aerofoil section. Two flaps are prohibited.
x	x	x	A Gurney is allowed, but there cannot be an air flow between the gurney and the wing surface. The wing gurney can have a maximum height of 25 mm, measured perpendicularly on the surface formed by the wing and needs to be firmly fixed over its complete length if it does not form an integral part of the wing. 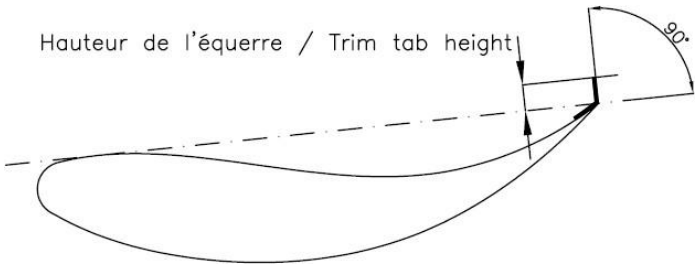
x	x		<u>Dimensions</u> The wing (endplates included) needs to fit in a volume with a maximum dimension of 520 mm (longitudinal and horizontal) x 150 mm (height) x 1650 mm (transversal). For homologated cars, wings must be conform to the homologation. The chord of the wing main plane must be maximum 400 mm.
		x	<u>Dimensions</u> The wing (endplates included) needs to fit in a volume with a maximum dimension of 520 mm (longitudinal and horizontal) x 150 mm (height) x 1700 mm (transversal). For homologated cars, wings must be conform to the homologation. The chord of the wing main plane must be maximum 400 mm.
x	x	x	<u>Vertical wing supports</u> Their surface needs to be flat and parallel to the longitudinal centre line of the car. They need to be laterally at least 100 mm off of the end plates and they need to be made out of metal (attachment included).

			The front side can be rounded off (with a constant radius) and the rear side can be ground diagonally over 20 mm max. <u>Endplates</u> Their surface needs to be flat and parallel to the longitudinal centre line of the car and their minimum thickness is 10 mm. The edge need to be rounded off with a constant radius of minimum 5 mm, except in case of a specific homologated approval by RACB Sport. For homologated cars, wing supports and endplates must be conform to the homologation.

3.5.3 Bumpers

T	S	GT	Bumpers
x		x	The front and rear bumpers cannot be removed or reinforced and need to remain in place during the complete duration of the meeting. In vertical projection, as seen from above, the shape of the front and the back bumpers need to have the same profile as the original version. No part of the bumper can be located outside this shape, except if it has been homologated by the FIA or RACB Sport.
	x		The shape of the front and rear bumpers, as seen from above, needs to have the same profile as the original. They cannot exceed the bodywork to the original values. The lateral parts can be connected to the new fender in order to preserve the aspect of the original car.
x	x	x	The lateral parts can be connected to the new fender in order to preserve the aspect of the original car.
x	x	x	It is allowed to close the openings if additional lights are not installed.

3.5.4 Underbody and side skirts

T	S	GT	Underbody
	x		It is allowed to install a new underbody on each side of which the width is not higher than the bottom of the front and rear fenders to which it is connected. The upper surface needs to pass under the door and follow the flatness of the flat bottom, except for the first and last 35 cm. In these zones, it is allowed to round off the surfaces with only an aesthetic purpose and therefore no aerodynamic improvement in mind. Adding planes or flaps is prohibited.

3.5.5 Fenders

T	S	GT	Fenders (flanks)
x	x	x	Cut-outs or openings in the front and rear fenders are only allowed, if: • The bodywork covers all mechanical elements in a vertical projection, as seen from above. • Their height does not exceed the maximum height of the wheel opening. • A safety measure needs to be installed at the cut-outs or openings in order to avoid projections to the back (ex: grills). Adding 'dérives' is not allowed.

3.5.6 Varia

T	S	GT	Varia
x	x	x	Adaptions that are necessary for additional light supports and connections for refuelling are allowed. Additional lights cannot be installed beyond the most frontal point of the car. It is allowed to close the openings if additional lights are not installed.

Art. 4 WEIGHT

4.1 Minimum weight

T	S	GT	Minimum weight
x	x	x	The minimum weight of the car – this is the weight of the car at any given moment during the meeting, without pilot and his equipment, an empty fuel tank and the other tanks for different fluids at their normal level – in function of the class and the cylinder capacity, must respect the minimum weights defined in this article.
x		x	Improvement factor cylinder capacity: - Supercharged engine gasoline x 1.7 - Supercharged engine diesel: x 1.5 - Double turbo engine: x 2.0 - Rotation engine: x 1.5
x	x	x	All homologated cars (TCR, GT4, GT3,…) must respect the minimum weight defined in their homologation. Competitor must be in possession of the homologation documents.
		x	All Porsche cars included in the Porsche Endurance Trophy Benelux (PETB) Regulations must respect the minimum weight indicated in these regulations.
x	x	x	**Class 1 & Class 2** : The minimum weight of the car indicated in Article 4 is the minimum weight which must be respected at any moment and without BOP ballast. The total minimum weight of the car may be adjusted in the BOP decisions using BOP ballast.

x			• **Class 3 – Super Sport** ○ Touring cars: Corrected cylinder capacity — Minimum weight > 4000 cc — 1170 kg 3501 cc → 4000 cc — 1150 kg 3001 cc → 3500 cc — 1100 kg 2801 cc → 3000 cc — 1050 kg ○ Silhouette Cup cars: Model — Minimum weight Ligier JS2R/JS2R Evo — 980 kg Lamera Cup — 1020 kg ○ SS Open: Minimum weight defined in the Technical Passport.

			• **Class 4 – Club Sport:** ○ Touring cars: Corrected cylinder capacity — Minimum weight 2501 cc → 2800 cc — 1000 kg ○ NLS VT2 Class Cars: see Appendix 1 of these regulations. ○ CS Open: Minimum weight defined in the Technical Passport. • **Class 5 – Club Challenge:** Corrected cylinder capacity — Minimum weight 2001 cc → 2500 cc — 980 kg 1801 cc → 2000 cc — 930 kg 1601 cc → 1800 cc — 880 kg 1401 cc → 1600 cc — 850 kg 1301 cc → 1400 cc — 760 kg 1001 cc → 1300 cc — 730 kg < 1000 cc — 670 kg ○ CC Open: Minimum weight defined in the Technical Passport.
	x		• **Class 1 Grand Touring Cup – Silhouette PRO & PRO EVO** Cylinder capacity — Minimum weight Max. 3500 cc - single throttle valve — 1000 kg Max. 3200 cc - multi throttle valve — 1000 kg • **Class 2 Grand Touring Sport – Silhouette Light** Cylinder capacity — Minimum Weight Max 3500 cc — 965 kg Type — Minimum Weight Peugeot RC Diester Cup — 845 kg Roadster Cup — 730 kg Roadster Cup S — 780 kg Saker RAPX — 825 kg
		x	• **Class 1 Grand Touring Cup** ○ Homologated GT Car: Minimum weight defined in the Homologation ○ GT Cup: Minimum weight defined in the Cup regulation. ○ GTC Open: Minimum weight defined in the Technical Passport. • **Class 2 Grand Touring Sport** ○ Homologated GT Car: Minimum weight defined in the Homologation ○ GTS Open: Minimum weight defined in the Technical Passport.

4.2 Balance

T	S	GT	Balance
x	x	x	RACB Sport, in agreement with the promoter, reserves the right to change the class and/or minimum weight of a car, to impose a restrictor or to use another measure or enacting term in order to optimise the equality of performances between the cars. If a change in class has been carried out, the transmission of the already given elements towards the new class can be imposed and this completely depending on the RACB and the promoter.

4.3 Ballast

T	S	GT	Ballast
x	x	x	The use of one or more ballasts is allowed in order to bring the car to its minimum weight. However, before adding ballast, the participant has to replace the bodywork elements and the windows made of synthetic material (removed if mentioned in the catalogue of the manufacturer or in a homologation). The ballast will consist of solid blocks as a unity and will be fixed in a visible way. It needs to be fixed at the bottom of the interior of the car, on the passenger side. The ballast needs to be visible and sealed by the scrutineer and this at the request of the team. The ballast will be attached using 4 bolts of a quality 10.9 with a minimum diameter of 10 mm. A 3mm thick reinforcement plate to accommodate the ballast must be bolted (min. 4 bolts) or welded to the chassis. Each contact point between the reinforcement plate and the chassis must be at least 40cm². Any movable ballast system when the car is moving is strictly forbidden.

4.3.1 BOP Ballast

T	S	GT	BOP Ballast
x	x	x	The mandatory ballast indicated in the BOP decisions of the championship must be secured according to the specifications of Article 253-16 concerning the dimensions and characteristics of the fixations. The securing system must allow seals to be affixed to the ballast by the scrutineers and must be designed such that tools are required for its removal. Any movable ballast system when the car is in motion is forbidden. In addition to these requirements, the BOP ballast must comply with the following points: – It must be made from stacking metallic plates according to Drawing n° 257A-1 – The plates must be firmly attached inside a housing by means of 5 M12 screws. – The height of the stacking plates is limited at 15 cm. – This ballast must be secured in the cockpit in the passenger's location.

			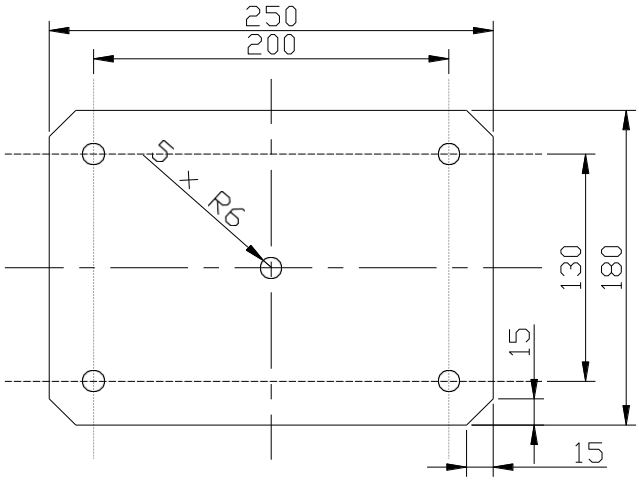 257A-1

4.4 Weighing

T	S	GT	Weighing
x	x	x	The weight can be controlled at any given moment during the meeting, except during the race itself. Adding any solid material or replacing a certain part with a heavier one is explicitly forbidding during a race.

Art. 5 ENGINE

T	S	GT	Engine
x	x	x	For homologated racing cars, the engine and associated accessories and systems (ECU, fuel, cooling, lubrication,…) needs to be in conformity with their homologation file. For GT Cup Cars, the engine needs to be in conformity with the homologation file and the Cup regulation. For other cars, the engine and its modalities are free, on the condition that they meet the prescriptions in art. 5.1 to 5.6.

5.1 Type and position of the engine

T	S	GT	Type and position of the engine
x		x	The brand, the number of cylinders and the position of the engine need to remain original. It is allowed to replace the engine of a car by an engine of the same brand, with the same number of cylinders and in the same position as the original.
x	x	x	Engines from the FIA group C, FIA group GT1, FIA group Sportscars and the Deutsche Tourenwagen Meisterschaft, or similar classes in other disciplines anywhere in the world, are not allowed.
x		x	The engine needs to be installed in the original engine compartment.
	x		The engine, for the Division Silhouette, needs to be built centrally in the back, taking into account the fireproof bulkhead as described in art. 15.3.

5.2 Changes to the engine

5.2.1 Materials

T	S	GT	Materials
x	x	x	• The use of magnesium and titanium is not allowed, unless it was used in the original part. • The use of ceramic or ceramic covered components is not allowed, unless the material was used in the original part. Exception: the exterior ceramic treatment of the exhaust system. • The use of carbon or composite material is limited to the clutch plates, no-voltage cladding and airflows. • However, it is allowed to use heat-treatment on certain parts, on the condition that it remains possible to, beyond doubt, show that the part comes from a production model.

5.2.2 Accelerator

T	S	GT	Accelerator
x	x	x	Only a direct mechanical connection between the accelerator and the engine is allowed. If original and if the used engine is equipped with a system without mechanical connection, this system can be preserved, but not modified.

5.2.3 Various

T	S	GT	Various
x	x	x	• In the intake system, only throttle valves are allowed. Slide throttling valves and tube throttling valves are prohibited. • Variable intake systems, length or volume, are prohibited. • Ignition accessories are free.
x		x	• It needs to be possible to identify the flywheel as an original element. However, it can be lightened.

5.2.4 Engine control

T	S	GT	Various
x	x	x	For naturally aspirated engines, the control unit is free, as is the speed limiter.
x		x	The control unit is free for supercharged engines. Under no circumstances, can the pressure of the supercharger be changed while driving.
x	x	x	**Class 1 & Class 2 Cars:** The Control Unit must remain original.
x		x	The principle of injection, number and installation, that controls the dosage of the engine's fuel, needs to be preserved.

5.3 Atmospheric engines

T	S	GT	Atmospheric engines
x			The cylinder capacity of atmospheric engines is unlimited.
		x	The cylinder capacity of atmospheric engines is limited to 5000 cc in the GTC Open.
x	x	x	The intake is regarded as the whole between the throttle valve box (included) and the intake port on the cylinder head.
x			• **Class 3:** For engines +3500cc, the intake needs to be standard or homologated by the constructor for a mono brand cup or be approved by RACB Sport. For engines -3500cc, the intake is free. For monobrand cup cars with engines -3500cc the intake needs to be standard or homologated by the constructor for a mono brand cup. For engines -2000 cc, the intake is free. • **Class 4 & Class 5:** The intake is free.
x	x	x	For homologated racing cars, the intake needs to be in conformity with their homologation file For Cup cars, the intake needs to be in conformity with their homologation file and the cup regulations
	x		• **Class 1 – Silhouette PRO and PRO EVO:** ○ A maximum cylinder capacity of 3500 CC with max. 1 throttling valve per cylinder and max. 6 cylinders with a max. of 5 valves per cylinder. ○ A maximum cylinder capacity of 3200 CC multi throttling valve and a maximum of 6 cylinders and max. 5 valves per cylinder. • **Class 2 – Silhouette Light :** ○ V6 with max. 3500 CC fully original or conform to the homologation file B-2007-03 (Solution F TC06). ○ For all Silhouettes that use a VQ35 (Nissan) or VV4Y (Renault) engine, or one of its derivatives, a spacer of max. 20 mm can be installed between the bottom part (ref. 14010-AM61A or 14010-AC80A or 14010-AC805) and the upper part (ref :14010-CD000 or 14010-CD00A). It is allowed to turn the upper plenum part in order to change the position of the butterfly box. The shape of the oil housing is free, but the principal of the lubricating system needs to be maintained. ○ 2000 CC exclusively Roadster Cup S, ○ 2200 CC exclusively Diester Cup ○ 1870 CC exclusively Roadster Cup ○ Accepted after approval of a detailed technical file. For homologated racing cars, the intake needs to be in conformity with their homologation file.
x	x	x	RACB Sport reserves the right to, in agreement with the promoter, change the diameter of the restrictor.

5.4 Air intake system

T	S	GT	Restrictors
x	x	x	When using one or more restrictors, all the air towards the engine needs to pass through these restrictors. No canal that can contain air, can come in or out the air box. Closing restrictors needs to immediately result in the stopping of the engine (3 sec.). This check needs to be made during an engine speed of 2500 tr/min. For this check, the pressure receptors and safety valves can be dismounted and the assembly interfaces of these sensors or valves will be covered.

5.5 Engines with supercharger

T	S	GT	Engines with supercharger
x		x	The supercharging system is considered to be a tool that allows the raise in pressure of the mixture air-fuel in the internal combustion engine (compared to the pressure of the normal atmospheric pressure, the effect of inertia and the dynamic effects in the intake and/or exhaust system), in any given way. The injection of fuel under pressure is not regarded as supercharging. It can consist of a turbo, compressor, heat exchanger, element and piping of the supercharging, system regulator…
x		x	The brand as well as the type of the supercharging system need to be specified on the passport of the car and be approved by the RACB Sport.
x			• **Class 3** - An engine with supercharging < 2000 cc (before correction) of which the supercharging system is no longer standard. - An engine with supercharging < 2000cc (before correction) of which the supercharging system is standard or has been homologated by the manufacturer for a mono brand cup. - An engine with supercharging < 1600cc (before correction) of which the supercharging system is no longer standard or homologated by the manufacturer in S2000. • **Class 4 & Class 5** - An engine with supercharging < 1600cc (before correction) of which the supercharging system is of a series, homologated by the manufacturer in Group R or for a mono brand cup.

5.6 Control system

T	S	GT	Control system
x		x	Cars with supercharged engines cannot be equipped with a system that allows the pilot to, while driving, adapt or change the supercharger or the electronic system that controls the supercharger.

5.7 Water vaporiser or injection

T	S	GT	Water vaporising
x		x	The internal and/or external water vaporising or the injection of water or of another substance is prohibited (with the exception of the fuel necessary for the normal engine combustion).

5.8 Cooling

T	S	GT	Cooling
	x		The cooling system is free.
x		x	The cooling system is free, but the radiator needs to remain in its original position.

5.9 Exhaust

T	S	GT	Exhaust
x	x	x	The exhaust system is free, on the condition that it is made of mild or stainless steel with a minimum thickness of 1 mm. It needs to have at least one silencer through which all exhaust gasses must flow. Variable exhaust systems are not allowed, with the exception of a waste gate for supercharged engines. The exhaust nozzle needs to be fixed at the back of the car and no less than 10 mm and no more than 150 mm from the back of the outline of the bodywork. It is recommended that the complete exhaust system has one or more homologated catalytic converters that work at all times and through which all exhaust gasses must flow. A possibility of control needs to be provided in the proximity of the catalytic converter.
x	x	x	**The noise produced by a car will be determined based on the regulation and the imposed limits, written in the special race regulation, or the limits imposed by the visited circuit, during the meeting.**

Art 6. FUEL LINES, FUEL PUMPS AND FUEL TANKS

T	S	GT	Fuel lines, pumps and fuel tanks
		x	For homologated race cars, the fuel system needs to be in conformity with the homologation file. For the GT Cup Cars, the fuel system needs to be in conformity with the homologation file and the Cup regulation. For other GT cars, the fuel system is free, on the condition that it meets the prescriptions in art. 6.1 to 6.7.
x	x		For homologated race cars, the fuel system needs to be in conformity with the homologation file. For other cars, the fuel system is free, on the condition that it meets the prescriptions in art. 6.1 to 6.7.

6.1 Fuel tanks and pumps

T	S	GT	Fuel tanks and pumps
x		x	The fuel tank needs to be placed in its original place or in the trunk. It needs to be separated from the pilot and the engine compartment by a water- and fireproof bulkhead and it needs to be surrounded by a compressible structure.
	x		In case of a Silhouette, the fuel tank can be placed in the front, in the cockpit behind and/or next to the driver's seat. It needs to be separated from the pilot and the engine compartment by a water- and fireproof bulkhead and be surrounded by a structure that absorbs energy.
x	x	x	The original fuel tank can only be replaced by a FT3-1999, FT3.5 or FT5 fuel tank that meets the prescriptions of the FIA. ▪ This fuel tank will be equipped with a printed code that mentions the name of the manufacturer, as well as the specifications according to which the tank has been built and the date of manufacture. ▪ This printed code needs to be easily verifiable. ▪ Flexible tanks cannot be used more than 5 years after the date of manufacture, except if they have been inspected and recertified by the manufacturer and this for a prolongation of maximum 2 years. The other FIA homologated tanks cannot exceed their printed end date. ▪ It is recommended to equip the by the FIA homologated tank with a safety foam of the type MIL-B-83054 or Stop. If the fuel pump(s) is (are) placed in the trunk, it (they) must be separated from the cockpit by a waterproof and fire and gas resistant bulkhead.

6.2 Assembly of the fuel tank

T	S	GT	Assembly of the fuel tank
x	x	x	The substitute tank needs to be fixed in a permanent way with a metal clamping system. If the fuel tank is installed under the car, it needs to be placed in a fireproof, close fitting case that does not offer any aerodynamic advantages and does not have any other mechanical function. This case needs to be equipped with a compressible structure at every external surface and needs to be fixed to the floor plane through minimum 2 metal clamps (30 mm x 3 mm) by means of bolts and nuts. For the installation of these clamps, the bolts need to have a minimum diameter of 10 mm. A reinforcement plate of minimum 3 mm thick and with a surface of minimum 20 cm² above the floor plate needs to be installed under each bolt. The compressible structure needs to be of the type 'honeycomb sandwich panel', equipped with a fireproof core with a minimum compressibility of 18N/cm². The use of aramid fibres is allowed. The sandwich panel needs to have two sheets of 1,5 mm with a tensile strength of minimum 225 N/mm² and of which the minimum thickness is 1 cm. The other openings – after removing the original tank – can be closed using a panel of the same dimensions.

			Replacing the tank cannot lead to other changes, weight saving or reinforcements than those mentioned in Article 255-5.7.1 of the FIA regulations.

6.3 Accessories and pipes

T	S	GT	Accessories and pipes
x	x	x	All pipes that run through the cockpit and can contain liquids, need to be covered or enclosed over their entire length, so the pilot is not affected by the liquids in case of a rupture. Fuel and oil pipes cannot show any connection unless with the bulkhead. (see drawing FIA 253-59 and 253-60). Fuel lines need to be original or meet aeronautical quality standard as described in FIA Appendix J – Article 253-3.2. The installation of fuel lines is free, as long as they respect the FIA regulations of Annex J Art. 253-3. They need to be placed at least 10 cm removed from electric lines and from the exhaust system.

6.3.1 Automatic fuel shutdown

T	S	GT	Automatic fuel shutdown
x	x	x	**Recommended for all:** All fuel lines towards the engine need to be equipped with valves that shut down automatically, and that are placed directly under the tank, and that automatically close all fuel lines under pressure, if one of these lines of the fuel system is broken or is leaking. **Obligatory:** All fuel pumps can only work when the engine is running, except during the start-up.

6.3.2 Vent of the fuel tank

T	S	GT	Vent of the fuel tank
x	x	x	The ventilation line of the fuel cell as far as the valves described below must have the same specifications as those of the fuel lines (Article 6.3) and must be fitted with a system complying with the following conditions : • Gravity activated roll-over valve • Float chamber ventilation valve • Blow-off valve with a maximum over pressure of 200 mbar, working when the float chamber ventilation valve is closed. If the internal diameter of the fuel tank breather venting tube is greater than 20 mm, a non-return valve homologated by the FIA and as defined in Article 253-14.2 must be fitted.

6.4 Fuel filling system (car)

T	S	GT	Fuel filling system (car)
x	x	x	A filler orifice is preferably provided at the exterior of the car and must meet the safety standards of the FIA, Annex J art. 258-6.3 of 2010. An inlet orifice cannot be placed in the cockpit.

			If the inlet orifice is placed in the trunk, a collection unit with an overflow port to the outside needs to be installed around the inlet orifice. On the lowest point of the trunk bottom, drillings need to be made so the spilled fuel can drain away. The closing cap of a tank filled in the trunk, cannot have vent holes or valves.

6.5 Refuelling

T	S	GT	Refuelling
x	X	x	Refuelling during races is only allowed in front of the box, unless otherwise mentioned in the special regulations of the meeting.

6.5.1 Filling station

T	S	GT	Filling station
x	x	x	During a race, refuelling is allowed with an autonomous filling station, but it has to meet the FIA regulations, as described in annex J of the current FIA yearbook, Art. 257A – 400.1 and in conformity with drawing 252-7. Filling the filling station can only be done with a mechanical manual pump and not with jerry cans.

6.5.2 Grounding

T	S	GT	Grounding
x	x	x	While refuelling, the car needs to remain on its wheels and can certainly not change levels. Before refuelling, the car needs to be electrically grounded. All metal parts of the refuelling system, from connections to supply tank and scaffoldings need to be electrically grounded.

6.6 Other refuelling systems

T	S	GT	Other refuelling system
x	x	x	1. During trainings or races, it is allowed to refuel using the standard refuelling tower conform to Art. 6.5.1 or using a pressure-free tank of maximum 35 litres that is ventilated and equipped with a leak-free connection that fits the filling system of the car and this according to the FIA regulations, as described in Annex J of the current FIA yearbook and the drawings 252-1 and 252-2. The system needs to be equipped with a restrictor with maximum inner diameter of 30 mm on a length of min. 2 mm. 2. A supply system that exists of a tank of 60 L with UN-certificate, a reinforced cart, a manual swivel pump at low pressure, a supply pipe of max. 4 metres and a homologated nozzle with auto-stop and a 21,3 mm outside max. diameter outlet, everything connected and approved. The system needs to be checked and marked for use by the RACB.

6.7 Fuel on board

6.7.1 Temperature

T	S	GT	Temperature
x	x	x	Storing fuel on board of the car at a temperature lower than 10°C under the prevailing outside temperature, is not allowed. The use, whether or not on board, of any equipment meant to turn the temperature of the fuel lower than the prevailing outside temperature, is not allowed.

6.7.2 Fuel tank capacity

T	S	GT	Fuel tank capacity
x	x	x	The maximum fuel tank capacity, supply tank (with a maximum capacity of 1 litre) included, is maximum 120 litres. Other fuel volumes can be limited by specific regulations, e.g., the Porsche Endurance Trophy Benelux or the BOP decided by the promoter. Every system, procedure, construction, or design that has been designed to (temporarily) raise the volume in any given way to more than the allowed maximum litres, is prohibited. Other fuel types than gasoline and diesel are not allowed. Checks can be held by weighing the difference between the weight of the car with an empty fuel tank and the weight of the car with a full fuel tank. For all technical checks, the 80 litres fuel will be considered as weighing 61 kg; and this at any given moment and in all circumstances.

Art 7. LUBRICATION SYSTEM

T	S	GT	Lubrication system
		x	For homologated racing cars, the lubrication system needs to be in conformity with the homologation file. For the GT Cup Cars, the lubrication system needs to be in conformity with the homologation file and the Cup regulations. For other GT cars, the lubrication system is free, on the condition that it meets the regulations in art. 7.1 to 7.2.
x	x		For homologated race cars, the lubrication system needs to be in conformity with the homologation file. For other cars, the lubrication system is free, on the condition that it meets the regulations in art. 7.1 to 7.2.

7.1 Oil reservoirs

T	S	GT	Oil reservoirs
x	x	x	If the oil reservoirs are not stored in their original place, they need to be surrounded by a 10 mm thick deformable structure, in case of direct contact with the bodywork. The oil reserve cannot be placed in the cockpit.

7.2 Oil dump tank

T	S	GT	Oil dump tank
x	x	x	If the original carter ventilation is not maintained, it needs to be diverted to a dump tank with a minimum capacity of 2 litres. The dump tank needs to be assembled using solid, fireproof materials and needs to be equipped with a ventilation. Placing the oil dump tank in the cockpit is not allowed. The collection and ventilation points of the dump tank need to form the highest points of the tank. The carter ventilation cannot be freely pointed to the ground.

Art 8. ELECTRICAL EQUIPMENT

T	S	GT	Electrical equipment
		x	For homologated race cars, all electrical systems need to be in conformity with the homologation file. For the GT Cup Cars, the electrical system needs to be in conformity with the homologation file and with the Cup regulations. For other GT cars, the electrical system is free, on the condition that it meets the regulations in art. 8.1 to 8.4.
x	x		For homologated race cars, all electrical systems need to be in conformity with the homologation file. For other cars, the electrical system is free, on the condition that it meets the regulations in art. 8.1 to 8.4.

8.1 Battery

T	S	GT	Battery
x	x	x	If the battery is placed in its original place, it needs to be firmly and permanently fixed and the positive pole needs to be covered by a cover made of insulating material. If the batteries are not placed in their original place, they need to be put in the cockpit, without hindering the exit of the pilot. They need to be fixed to the chassis in a safe way and be completely covered with a waterproof and corrosion-free box that has its own adhesion and air vent with an exit outside the cockpit. If a dry battery is installed in the cockpit, the positive pole needs to be covered with a cover made of good insulating material. The attachment to the bodywork needs to consist of a metal seat and two metal clamps with an insulating coating, fixed to the bottom by means of bolts and nuts. Fixing the clamps needs to be done by using bolts with a minimum diameter of 10 mm. Under each bolt, a reinforcement plate of min. 3 mm thick and at least 20 cm² surface needs to be installed under the bodywork plate (drawing 255-10 and 255-11).

8.2 Windshield wiper

T	S	GT	Windshield wiper
x	x	x	Every car needs to have at least one well-functioning windshield wiper that cleans the windshield in front of the pilot and this during the whole duration of the meeting. Engine, placement, number of blades and mechanism are free. The whole mechanism of the headlight washers can be removed.

8.3 Starting

T	S	GT	Starting
x	x	x	A starter that functions during the whole duration of the race needs to be installed. The pilot needs to be able to operate the starter from a normal driving position. For the settling or adapting of the engine, starting can also be done by means of an external battery. The connection of the external battery needs to be located within the safety cage and needs to be used by means of a special starting plug. Under no circumstances, can this connection be placed under the hood or in the direct proximity of the fuel tank or fuel lines. When the car wants to continue the race after a pit stop, all the wheels need to touch the ground before starting the engine and this from a seated position behind the steering wheel and without external equipment.

8.4 Lighting

8.4.1 Procedure

T	S	GT	Procedure
x	x	x	During trainings and races, every car needs to be equipped with efficient lighting. The original lights or lights included in the manufacturer's catalogue need to be used. The lights need to remain in their original location. Lightening these lights is allowed. Every car needs to be equipped with at least (functioning): ▪ At the rear of the car: two red stop lights, two normal red lights and two orange direction indicators; these need to be installed at each side of the car, symmetrically towards the longitudinal axis, so they are visible. A red rain light is also obliged. ▪ Front: at least two white lights and two orange direction indicators. ▪ The light bulbs of the reversing lights need to be removed. ▪ As soon as rain tyres or tyres that cause splashing water are used, the driver needs to turn on the lights ~~and the rain light~~ of the car. ▪ Headlight grilles can be installed. While showing the panel 'LIGHT', the car immediately needs to go into its box in order to have the protection removed. If, following an incident during the race, a car has problems with the lights, it can remain on the racetrack if at least one front and one rear light functions. Identical, also one stop light needs to function. If the circumstances of the race require it, the rain light must be operational.

8.4.2 Rain light

T	S	GT	Rain light
x	x	x	All cars need to be equipped with a red rear light of at least 21 Watt that needs to remain operation during the complete meeting and that is: ▪ A model approved by the FIA (technical list n°19) or by the ASN. ▪ Directed to the back relative to the central axis of the car. ▪ Clearly visible from behind. ▪ Installed not more than 10 cm away from the central axis of the car. ▪ Installed at least 35 cm above the ground. ▪ Can be activated by the driver from a seated position. The reference of the two dimensions is the centre point of the surface of the lens.

8.4.3 Illumination of the race numbers during night races

T	S	GT	Illumination of the race numbers during night races
x	x	x	If a race is held in the dark, the lateral race numbers need to be illuminated. These lights need to be lit together with the headlights. Using illuminated backgrounds is recommended, but not obliged. At no point in the race can a white light be pointed rearwards, not even in order to illuminate the race numbers, nor the numbers meant for the identification of the car. At no point in the race can a red light be pointed forwards, not even the lights meant to illuminate the race numbers, nor the lights for the identification of the car. It is prohibited to use flashing lights or rotating lights.

8.5 Data Logger & ECU – Only for Class 1 & Class 2 Competitors

T	S	GT	Data Logger & ECU
x	x	x	A data-logger with additional sensor must be installed in all cars at all Competitions in accordance with Belcar Sporting Regulations. Belcar Data Technicians will check all data loggers prior to the first free practice. Cars without loggers or with loggers which are not working correctly are not in conformity with the regulations and may be reported to the Stewards. The data-logger is also a Scrutineering device and data will be used for Scrutineering purposes. The reference engine data will be the data collected during any official Belcar test or session or those collected during other tests and races with the current BOP decisions. Only the Data cards supplied with the Data Logger or by the Data Technician are authorised to be used during any Event. No data, memory cards or similar storage media shall be extracted or removed from the datalogger system during the Event. This can only be done by the Data Technicians or Scrutineers working for the Technical Delegate or otherwise upon their specific request. The removal, extraction or manipulation (manually, electronically or in any other form) of data or memory cards or similar storage media or the data logger will be reported to the Stewards.

			Data cards and any other component of the data logging system may be sealed at any time. Information on the installation and use of the data logger is available in appendix of the Sporting Regulations. The data thus collected must remain at the disposal of the RACB & Belcar Technical Department and the Technical Delegate. The Belcar and RACB Technical Department can be assisted by technicians specialized in electronic systems in order to ensure the correct operation and the conformity of the readings of the data logging system and the conformity of the various systems with which the cars are equipped. They may at any moment remove, exchange or control the various electronic components of a car and draw up a report to the Technical Delegate on their investigations, and they reserve the right to keep the components they have removed for later analysis. No protest or appeal will be accepted concerning these controls and removed components. If a case of non-conformity is noted (either during or after any Event), this may be reported to the Stewards. The data logger must work throughout each Competition, including during every practice. Controls may be carried out at any time during any Event. Competitors cannot leave any Event before their data loggers have been downloaded or unless the Stewards have given their consent for them to leave. The failure of the data logger or data card to operate fully and correctly or to record and store for retrieval all required data, will be considered a sporting infringement, and penalties will be imposed by the Stewards. The GPS antenna of the data logger must be mounted on the roof and no other antenna can be within 30 cm of this. If necessary, the Belcar and RACB Technical department can require Competitors to remove other antennas from the roof.

Art 9. TRANSMISSION

T	S	GT	TRANSMISSION
		x	For homologated racing cars, the transmission needs to be in conformity with the homologation file. For the GT Cup cars, the transmission needs to be in conformity with the homologation file and the Cup regulations. For other GT cars, the transmission is free, on the condition that it meets the regulations in art. 9.1 to 9.4.
x	x		For homologated race cars, the fuel system needs to be in conformity with the homologation file. For other cars, the transmission is free on the condition that it meets the regulations in art. 9.1 to 9.4 and that it respects the original position.
x	x	x	A four-wheel drive car can be changed into a two-wheel drive car.

x	x	x	For safety reasons, the transmission can be designed so that if the car stops and the engine shuts off, it becomes possible to push or pull it.

9.1 Changing gear

T	S	GT	Changing gear
x	x	x	The gear shifting mechanism (connection between the gearbox and the gear lever, handled by the pilot) is free. The system known as 'Gear Shifter', which facilitates gearing through an action on the operation of the engine (ignition or injection), by means of an interruption activated while moving the gear lever, is allowed. If the original car or a Cup version is equipped with a semi-automated or automated gearbox, it can be maintained. In that case, the gearbox and its synchronisation, as well as the complete control system need to remain original or meet the regulations of the Cup, or the homologation file.

9.2 Differential

T	S	GT	Differential
x	x	x	Electronically, pneumatically or hydraulically controlled differentials are prohibited. The use of a differential with a limited slip of the mechanical type, which means 'every system that functions purely mechanically without interference of a hydraulic or electric system', is allowed.

9.3 Gear box

T	S	GT	Gear box
x	x	x	The interior of the gear box is free. The proportions are free, but a maximum of 2 lists with proportions needs to be included in the passport of the car at the start of the season. The participant can change a proportion list but needs to communicate it and have it included in the technical passport of the meeting. The gear box can have a maximum of 6 forward and 1 rear acceleration. Every car needs to be equipped with a reverse gear that the pilot can use at any given moment during the meeting and this in a normal driving position and with the seatbelts on.

9.4 Clutch

T	S	GT	Clutch
x	x	x	Only a conventional mechanical design is allowed. The material is free. The coupling can only be activated by the pilot's foot, except in case of a semi-automated or automated gear box. An exception is possible for disabled pilots.

Art 10. SUSPENSION AND STEERING MECHANISM

T	S	GT	Suspension and steering mechanism
		x	For homologated racing cars, the suspension and the steering mechanism need to be in conformity with the homologation file. For the GT Cup Cars, the suspension and the steering mechanism need to be in conformity with the homologation file and the Cup regulations. For other GT cars, the suspension and the steering mechanism are free, on the condition that they meet the regulations in art. 10.1 to 10.8.
x	x		For homologated race cars, the fuel system needs to be in conformity with the homologation file. For other cars, the suspension and the steering mechanism are free, on the condition that they meet the regulations in art. 10.1 to 10.8.

10.1 Type of suspension and assembly

T	S	GT	Type of suspension and assembly
x	x	x	Every form of active suspension is prohibited. Every automated or electronic steering system or function for a chassis or suspension is prohibited, even if it has been assembled on a copy registered for road traffic. This includes, among others, the control and check system for shock absorbers, suspension and ride height. The suspension cannot solely exist of bolts that pass in flexible tubes and/or installations. The wheels need to be able to move with a suspension travel bigger than the one caused by such connections. Flexible joints can be replaced by metal joints (e.g. uniball joints). The fixation points to the frame or chassis need to be respected, with the exception of cases approved by the FIA.

10.2 Springs

T	S	GT	Springs
x	x	x	The material, the dimensions and the number of springs are free.

10.3 Shock absorbers

T	S	GT	Shock absorbers
x	x	x	The shock absorbers are free, as long as the number per axle does not exceed the original number.

10.4 Adjustments

T	S	GT	Adjustments
x	x	x	Adjustments to the springs, shock absorbers and stabiliser bars from the cockpit are not allowed.

10.5 Material

T	S	GT	Material
x	x	x	All support arms need to be made of homogeneous metal. Chroming of the support arms in steel is prohibited.

10.6 Steering mechanism

T	S	GT	Steering mechanism
x	x	x	All parts of the steering system need to be originally supplied by the manufacturer or be homologated. The original location needs to be maintained. With the exception of the homologated steering column, these parts can be reinforced, on the condition that the original part can always be identified. The steering column must include a retractable zone for vehicles of which the drive shaft does not form an angle of at least 15 degrees in relation to the steering column. The steering lock needs to be removed. The steering wheel can be replaced and can be assembled using a quick release system. The quick release system must consist of a concentric flange around the steering wheel axle. This concentric flange needs to be yellow through anodization or another durable coating and needs to be assembled on the steering column behind the steering wheel. The unlocking needs to be done by pulling the flange according to the axis line of the steering wheel.

10.7 Power steering

T	S	GT	Power steering
x	x	x	The power steering can be hydraulic, electrohydraulic or electric, on the condition that it consists of a simple system, without programmable steering.

10.8 All-wheel steering

T	S	GT	All-wheel steering
x	x	x	The use of all-wheel steering is not allowed.

Art 11. BRAKES

T	S	GT	Brakes
		x	For homologated racing cars, the brake system needs to be in conformity with the homologation file. For GT Cup cars, the brake system needs to be in conformity with the homologation file and the Cup regulation, the allowed adjustments in art. 11.6 not included. For other GT cars, the brake system is free, on the condition that it meets the regulations in art. 11.1 to 11.6.
x	x		For homologated race cars, the fuel system needs to be in conformity with the homologation file.

			For other cars, the brake system is free, on the condition that it meets the regulations in art. 11.1 to 11.6.

11.1 Dual-circuit brake

T	S	GT	Dual-circuit brake
x	x	x	The brake system is free. For safety reasons, it is obliged to have a dual-circuit brake controlled by one pedal. In normal conditions, the pedal pressure needs to be divided between all 4 wheels. In case of a leak at any given place in the lines or at any given place in the brake system, the pedal pressure needs to continue functioning on at least two wheels of the same axle. The reservoirs for the brake fluid can be placed in the cockpit, on the condition that they are firmly fixed and covered with leakproof and flameproof material.

11.2 Brake discs

T	S	GT	Brake discs
x	x	x	The brake discs are free, but need to be made from ferrous material and have a diameter of max. 380 mm. If the production vehicle has brake discs made of non-ferrous material, they can be maintained. The material for the brake pads is free.

11.3 Pedal and anti-blocking system

T	S	GT	Pedal and anti-blocking system
x	x	x	The assembly of a pedal is allowed. Servo-brakes, anti-blocking systems, … and other original accessories can be dismounted. A manually operated hydraulic brake pressure regulator that affects the rear brakes, is allowed and can be placed in the cockpit, within reach of the pilot, while sitting in a normal driving position, with safety belts on. A mechanic brake distribution front / rear is allowed (crank on the brake pedal, manually operated).
	x		For all cars of the type Silhouette, an anti-blocking system and powered brakes, in all their possible forms, are prohibited.

11.4 Brake callipers

T	S	GT	Brake callipers
x	x	x	The internal parts of the brake calliper can be made of titanium. Per wheel, one single calliper with a maximum of 6 pistons is allowed. The diameter of each piston of the brake calliper needs to be circular.

11.5 Brake lines

T	S	GT	Brake lines
x	x	x	Brake lines that are located outside the bodywork, need to be protected against every risk of damaging (by rocks, corrosion or mechanical problem, etc). Brake lines that are located inside the bodywork, need to be protected against every risk of fire and damaging. If brake lines run through the cockpit, the entrance and the exit need to be separated from the cockpit by means of a rubber protection.

11.6 Cooling of the brakes

T	S	GT	Cooling of the brakes
x	x	x	It is allowed to remove or modify the plates, but without adding material. One flexible canal or line for the air inlet towards the brakes of each wheel, is allowed. The air canals cannot exceed the perimeter of the vehicle, when viewed from above. External cooling of the brakes by means of fluid is forbidden. Cooling systems connected to the wheels are forbidden.

Art 12. WHEELS AND TIRES

T	S	GT	Wheels and tires
		x	For homologated racing cars, the wheels need to have a diameter, a width and an offset conform to the homologation file. For GT Cup cars, the wheels need to have a diameter, a width and an offset conform to the homologation file and the Cup regulations.
x			For homologated racing cars, the wheels need to have a diameter, a width and an offset conform to the homologation file.
x	x	x	It is forbidden to remove of modify the marking of the tires.

12.1 Definitions

T	S	GT	Definitions
x	x	x	Wheel = rim centre + rim Complete wheel = rim centre + rim + tire mounted on the wheel

12.2 Dimensions

T	S	GT	Dimensions
x	x		Maximum diameter of the wheel: 18"
x			Maximum diameter of the complete wheel : 650 mm
	x		• **BELCAR Class 1 – Silhouette PRO** Maximum width of the rim between its flanks : front = 10" rear = 12"

			• **BELCAR Class 2 – Silhouette Light** The dimensions of the used tires are as follows: front = 21/65 R18 rear = 24/64 R18 or front = 24/65 R18 rear = 27/65 R18

12.3 Visibility of the wheels

T	S	GT	Visibility
x	x	x	When viewed from above and with the wheels placed straight ahead, the part above the wheel hub cannot be visible. The wheels need to be placed in such a way that the vehicle moves straight ahead.

12.4 Material of the wheels

T	S	GT	Material of the wheels
x	x	x	The material used for the wheels is free, on the condition that it is a homogeneous metallic substance. Wheel covers need to be removed. Wheels cannot show signs of cracks and they need to be clean when being introduced during the technical check.

12.5 Number of wheels

T	S	GT	Number of wheels
x	x	x	The maximum number of wheels on a car is four. Per axis, the wheels need to be of the same type, material and dimensions. A spare wheel cannot be present in the car.

12.6 Wheel fixing

T	S	GT	Wheel fixing
x	x	x	Fixing the wheel to the frame is free. If only one central hub is used, it needs to be secured with a red or orange safety spring release or split pin while the car is moving. After every tyre change, these need to be installed again. Other methods to retain the wheels can be used, on the condition that they are allowed by the FIA. The fixation of the wheels by means of bolts can be freely replaced by a fixation using a security pin and nut, on the condition that the number of anchor points and the security diameter are maintained. Wheel bolts always need to use the same amount of screw thread as the diameter of screw thread itself. If wedges or track extensions are assembled, they need to be fixed to the wheel hub or to the brake disc bell in a mechanical way.

12.7 Pneumatic jacks

T	S	GT	Pneumatic jacks
x	x	x	The use of pneumatic jacks is allowed, but bottles with compressed air cannot be placed in the car.

12.8 Check of the tyre pressure

T	S	GT	Check of the tyre pressure
x	x	x	The use of any means whatsoever that preserves the performance of the tyres, with an internal pressure equal to or lower than the atmospheric pressure, is forbidden. The inside of the tyre – space between the rim and the inside of the tyre – can only be filled with air. No additive whatsoever (gas, fluid …) is allowed. All regulation systems for tyre pressure, e.g. pressure relief valves, are forbidden. The use of valve caps is necessary.

Art 13. COCKPIT

T	S	GT	Cockpit
x		x	For homologated racing cars, the cockpit needs to be in conformity with the homologation file. For GT Cup cars, the cockpit needs to be in conformity with the homologation file and the Cup regulations.

13.1 Cockpit equipment

13.1.1 Dashboard

T	S	GT	Dashboard
x		x	The dashboard needs to be maintained. Lightening or modifying the dashboard is allowed.
	x		In Silhouette, the dashboard can be modified.
x	x	x	The instruments are free.
x	x	x	The original switches can be replaced by other switches of a different design. They can be placed in another location on the dashboard or console.

13.1.2 Need to be removed from the cockpit:

T	S	GT	Need to be removed from the cockpit:
x		x	Sound insulating material and coating against the roof. Tapestries and insulating materials. Steering lock Airbags

13.1.3 Can be removed from the cockpit:

T	S	GT	Can be removed from the cockpit:
x		x	Passenger seat and the complete rear seat All coatings and decorations. After removal, all sharp edges need to be protected efficiently. Air-conditioning, original safety belts and their roll-up mechanism, electrical window mechanisms, central door locks, radio, horn, glove box, central console, rear shelf, instruments, door cladding and other parts that, in the original car, only offer comfort to the passengers. The original system for ventilation, demisting and heating can be removed, but an adequate ventilation and demisting of the cockpit is obliged.

13.2 Equipment allowed in the cockpit:

T	S	GT	Equipment allowed in the cockpit:
x	x	x	▪ Safety structure and equipment ▪ Toolkit, only if firmly fixed ▪ Chair, instruments and other parts necessary for steering, brake ▪ pressure regulator included ▪ Electronic and electrical equipment ▪ Cooling system for the pilot ▪ Ballast ▪ Pneumatic jacks and their pipeline network ▪ Battery ▪ Ventilation equipment for the pilot ▪ Door covering None of the items above can hinder the cockpit exit or the visibility of the driver.

Art 14. SAFETY EQUIPMENT

14.1 Safety equipment « Car »

14.1.1 Fire extinguishers

T	S	GT	Fire extinguisher
x	x	x	Every car must be equipped with an automatic fire-extinguishing system (electrically or mechanically operated) conform to Art. 253-7 of annex J of the current FIA regulation. The list of manufacturers can be found in the FIA technical list n° 16 or 52. The pilot must be able to manually operate the fire-extinguishing system, while seated in a normal driving position, with seatbelts on and with the steering wheel in place. It also needs to be possible to activate this system from the outside using a single lever and optionally in combination with a circuit breaker, or in its proximity. It needs to be clearly marked by a letter 'E' both on the outside and on the inside. The following information needs to be visually represented on every fire extinguisher: ▪ Content ▪ Type of the product ▪ Weight or volume ▪ Date of check; this date cannot be older than two years after the filling date or after the previous check. Every fire extinguisher needs to be well protected. It needs to be secured with at least 2 metal clamps and the fastening systems need to endure a deceleration of 25 G. Anti-torpedo tabs are mandatory.

14.1.2 Safety belts

T	S	GT	Safety belts
x	x	x	Safety belts conform to FIA Appendix J – Article 253-6, with 5 or 6 attachment points are mandatory. Only harnesses compliant with FIA Standard 8853-2016 are allowed. The harnesses used in circuit races must be equipped with turnbuckle release systems. Installation and use must comply with FIA Appendix J Article 253-6.

14.1.3 Rear-view mirror

T	S	GT	Rear-view mirrors
x	x	x	Efficient wing mirrors on the driver's and passenger's side are mandatory. The placement is free, but every mirror needs to have a minimum reflecting surface of 90 cm². A ventilation opening can be included, with the sole purpose of refreshing the pilot. A rear-view mirror on the inside of the car is allowed.

14.1.4 Seat

T	S	GT	Seat
x	x	x	Driver seat must be conform to FIA Appendix J – Art. 253-16.

			The driver's seat needs to be of the type 'bucket seat', homologated by the FIA (FIA 8855-1999, FIA 8855-2021 or FIA 8862-2009 standard) with validity date, equipped with 5 openings for the safety harness. This homologated seat cannot be modified. They must be situated ahead of the main rollbar (or the rear pillar of the lateral rollbar) of the safety cage (Cf. Art. 253-8). Installation and use must comply with FIA Appendix J Article 253-16, including seat anchorage points and seat supports. Seats homologated with Standard 8855-2021 or 8862-2009 must be used with homologated seat supports. If the original seat anchorage and supports are being removed, the new parts need to be approved by the manufacturer of the seat for this purpose or they need to comply with the following specifications: Art 253-16 and drawing 253-65 of Annex J of the current FIA yearbook.

14.1.5 Circuit and voltage breaker

T	S	GT	Circuit / voltage breaker
x	x	x	A circuit breaker is mandatory and needs to break all electrical and voltage circuits: battery, alternator, lights, ignition, control tools etc… And it needs to stop the engine. The driver needs to, while sitting in a normal driving position and while wearing seatbelts and with the steering wheel in place, be able to cut off all electrical circuits using a non-sparking circuit breaker. The circuit breaker needs to be clearly marked by a symbol of a red spark in a white edged blue triangle. On the outside of the car, a circuit breaker switch is mandatory at the base of the windsreen. It needs to be clearly indicated by a symbol of a red spark in a white edged blue triangle with a base of at least 12 cm and it needs to be equipped with a lever that can be operated from a distance using a hook.

14.1.6 Drawbar eyes

T	S	GT	Drawbar eyes
x	x	x	A front and a rear drawbar eye are mandatory and need to be: ▪ Solid, made of steel, unbreakable, with an inner diameter between 60 and 100 mm and a thickness of 5 mm, or be homologated (e.g. straps). ▪ Rounded off, so they don't damage or cut the straps of the marshals. ▪ Firmly fixed to the chassis by means of a solid part made of steel (steel cables that form a loop are forbidden). ▪ Located within the perimeter of the bodywork, when viewed from above. ▪ Easily recognisable and be painted yellow, orange or red. ▪ Pulling a car from the gravel is allowed. Moreover, the precise place of the drawbar eyes needs to be marked with an arrow in a contrasting colour.

14.2 Safety equipment "driver"

The complete personal equipment needs to be shown during the technical check.

14.2.1 Helmet

Wearing a homologated helmet, for usage with a head and neck protection system (HANS® system), is mandatory when the car is in motion. The helmet needs to meet at least one of the valid standards found in FIA Technical List n° 25.

Every modification to the list above will be published in the monthly FIA Official Bulletin. Description of the labelling identifying the approved helmets, is available upon request from the FIA and RACB Sport.

The helmet needs to be equipped with tether anchors with the FIA code 8858-2002 or 8858-2010 and the accompanying FIA hologram sticker.

14.2.1.1 Modifications (Annex. L chapter. III 1.2)

No helmet can be modified compared to its manufacturing data.

14.2.1.2 Communication system (Annex. L chapter. III 1.3)

A radio communication system or headphone mounted in the helmet is forbidden. A hearing device, directly into the ear (type ear plug) is allowed.

Deviations solely for medical reasons can be approved by the medical commission of RACB Sport. A microphone can only be installed if it meets the prescriptions of the FIA (Annex L, chap. III, art. 1.2).

14.2.1.3 Decoration

Needs to meet the standards according to Annex L Chapter III 1.4 of the current FIA yearbook.

14.2.2 Head and neck protection system (HANS®) (Annex. L Chapter III 3)

The use of a head and neck restraint system (HANS®) is mandatory.

The list of systems (8858-2002 and 8858-2010) and helmets approved by the FIA can be found on the technical list n° 29 and n°41. The tethers need to be equipped with the FIA homologation label 8858-2002 or 8858-2010. The helmet needs to be equipped with tether anchors marked with FIA standard 8858-2002 or 8858-2010. Intercompatibility of norms as described in FIA Appendix L Chapter III-3.3 must be respected.

So far, no system offers a complete protection during accidents, but multiple studies have shown that a HANS® protection reduces the risk of head, neck and spine injuries. Every pilot needs to carefully choose from the available models.

14.2.3 Fireproof clothes (Annex L Chapter III 2)

During trainings and races, the pilot needs to wear a fireproof overall. The overall must carry a valid FIA standard 8856-2000 with hologram or FIA 8856-2018 homologation.

Furthermore, the pilot must wear long underwear, a balaclava, socks, shoes and gloves that meet the design and the parameters for the manufacturing, imposed by the FIA standard 8856-2000 with hologram or FIA 8856-2018.

The FIA homologated fireproof clothing can be found in the technical list n° 27 (FIA 8856-2000) and n° 74 (FIA 8856-2018).

Art 15. SAFETY STRUCTURE

15.1 Structure of the safety cage

T	S	GT	Structure of the safety cage
x	x	x	• The car needs to be equipped with a safety cage that complies with Art. 253-8 of Annex J of the current FIA regulation. • Every modification to a homologated safety cage is strictly forbidden and would lead to the safety cage being no longer conform. • Intermediate door supports in longitudinal direction, approved by the FIA, that ensure a lateral protection, need to be present, in agreement with drawings 253-8, 253-9, 253-10 and 253-11 of Annex J of the current FIA regulation.
	x	x	The safety structure need to be approved by the FIA or an ASN.
x		x	The tubes of the safety cage, that can come into contact with the body of the pilot, must be covered with fireproof material. Where the helmet can come into contact with the safety cage, the coating of the latter needs to at least comply with the FIA standard 8857-2001 type A. It is forbidden to assemble electrical, fuel or other lines between the safety cage and the bodywork.

15.2 Protection on the safety cage

T	S	GT	Protection of the safety cage
	x		Cars of the type Silhouette must be equipped with sandwich panels that absorb the energy, with a thickness of 80 mm, between the interior part of the door on the pilot's side and the safety cage. The definition of the materials of which these panels are composed as well as the scheme for their installation need to comply with the sketches 19a, b, c and d (ref. FFSA). For cars of the type Silhouette of 2000 and 2001, the protection can be placed between the inside of the door on the pilot's side and the pilot's seat. It is also possible to use a system of 2 overlapping parts that are placed on top of each other, of which the upper solidary with the door in order to facilitate the pilot's exit.

15.3 Fire-resistant bulkhead

T	S	GT	Fire-resistant bulkhead
x	X	x	Between the engine compartment, trunk, fuel tank on one hand and between the cockpit on the other hand, a fire-resistant bulkhead needs to be installed. This fire-resistant bulkhead will prevent fluids, flames or gasses from entering the cockpit. All holes in a fire-resistant bulkhead need to be so small, that they only allow the passage of lines and/or cables. These holes need to be completely closed and equipped with rubber grommets.

15.4 Composite frame

T	S	GT	Composite frame
		x	For every car equipped with a composite chassis, each reparation of the survival cell or the front protection needs to be made according to the specifications of the manufacturer, in one of the reparation centres, indicated by the manufacturer. Every important damage needs to be included in the technical passport of the car.

Art 16. FUEL

16.1 Fuel specifications

T	S	GT	Fuel specifications
x	X	x	The fuel used, needs to be a commercial fuel.

16.2 Air

T	S	GT	Air
x	x	x	For the preparation of the mixture, only air can be mixed with the fuel.

Art 17. CURRENT TEXT

The English text of the Technical Regulation will be the definitive text referred to in case of a dispute concerning the interpretation of this text. The titles of this document are only mentioned for the legibility and are not part of the current Technical Regulation.

Art 18. APPROVAL

Regulation approved by the RACB Sport on 20/03/2025 with Visa n° T01-BEC/B25

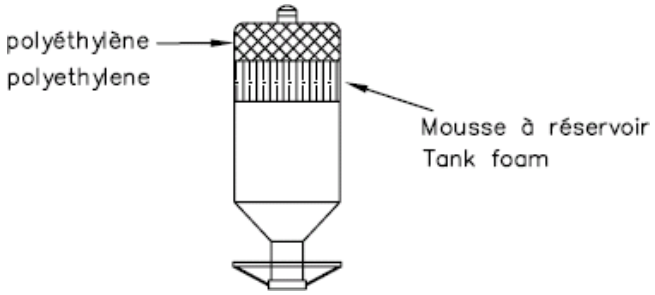

DRAWING 252-2

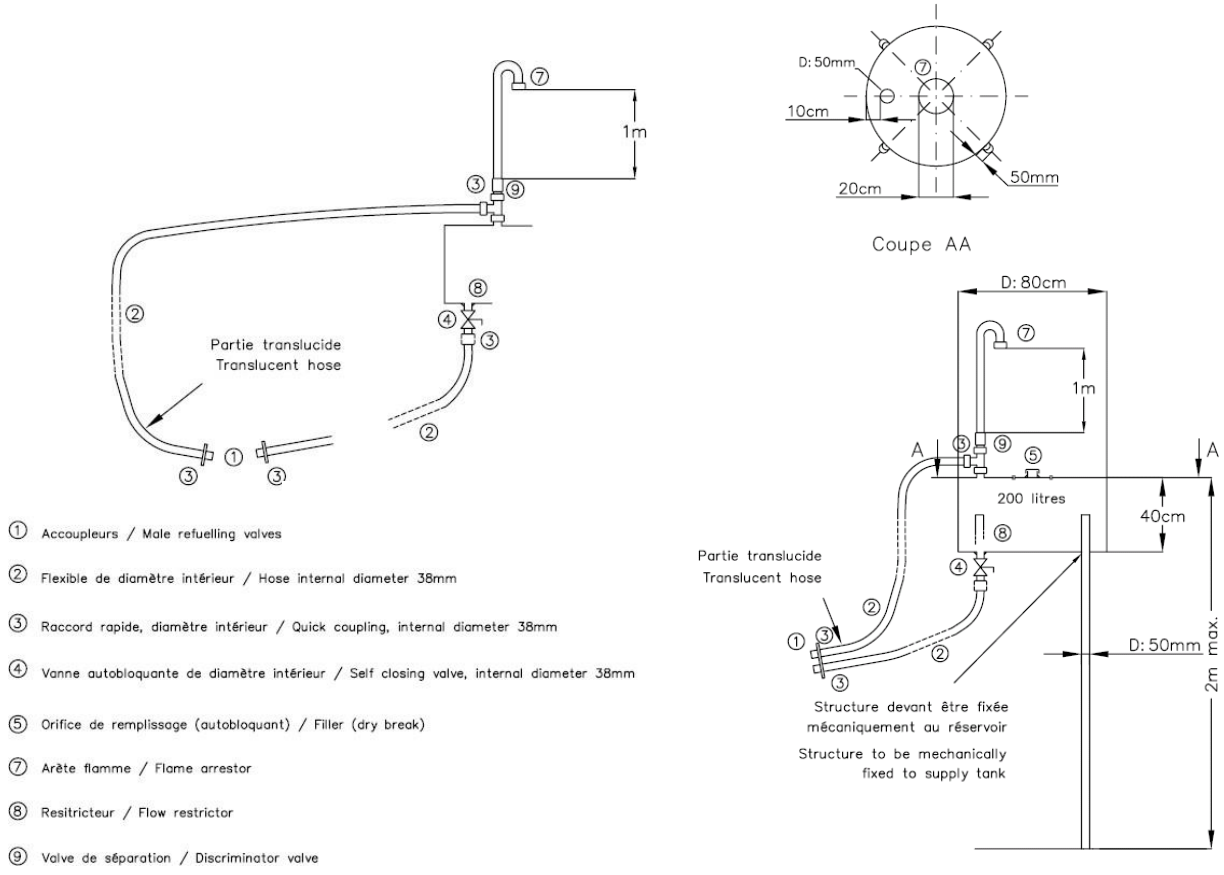

DRAWING 252-7

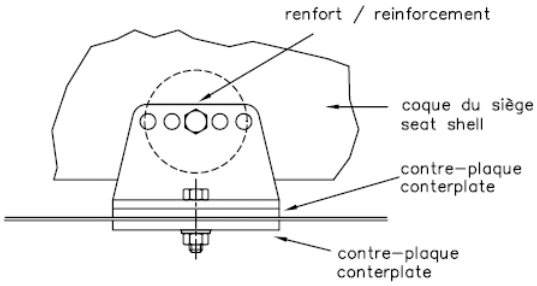

DRAWING 253-65

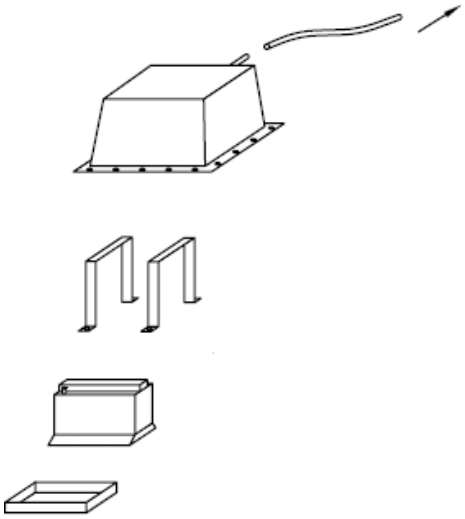

DRAWING 255-10

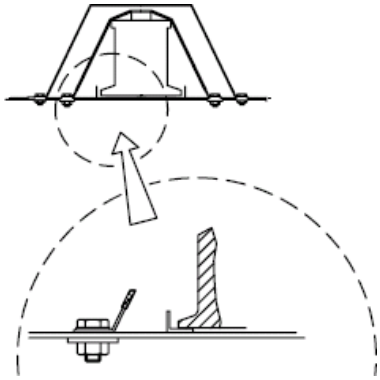

DRAWING 255-11

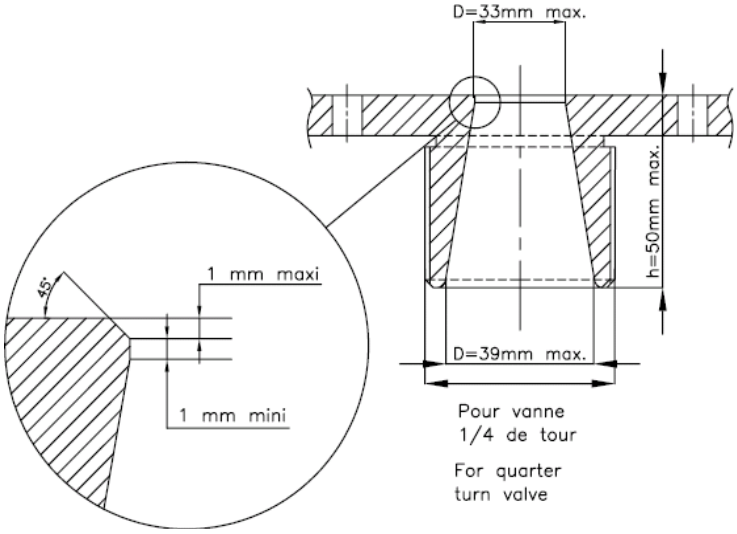

DRAWING 258-3

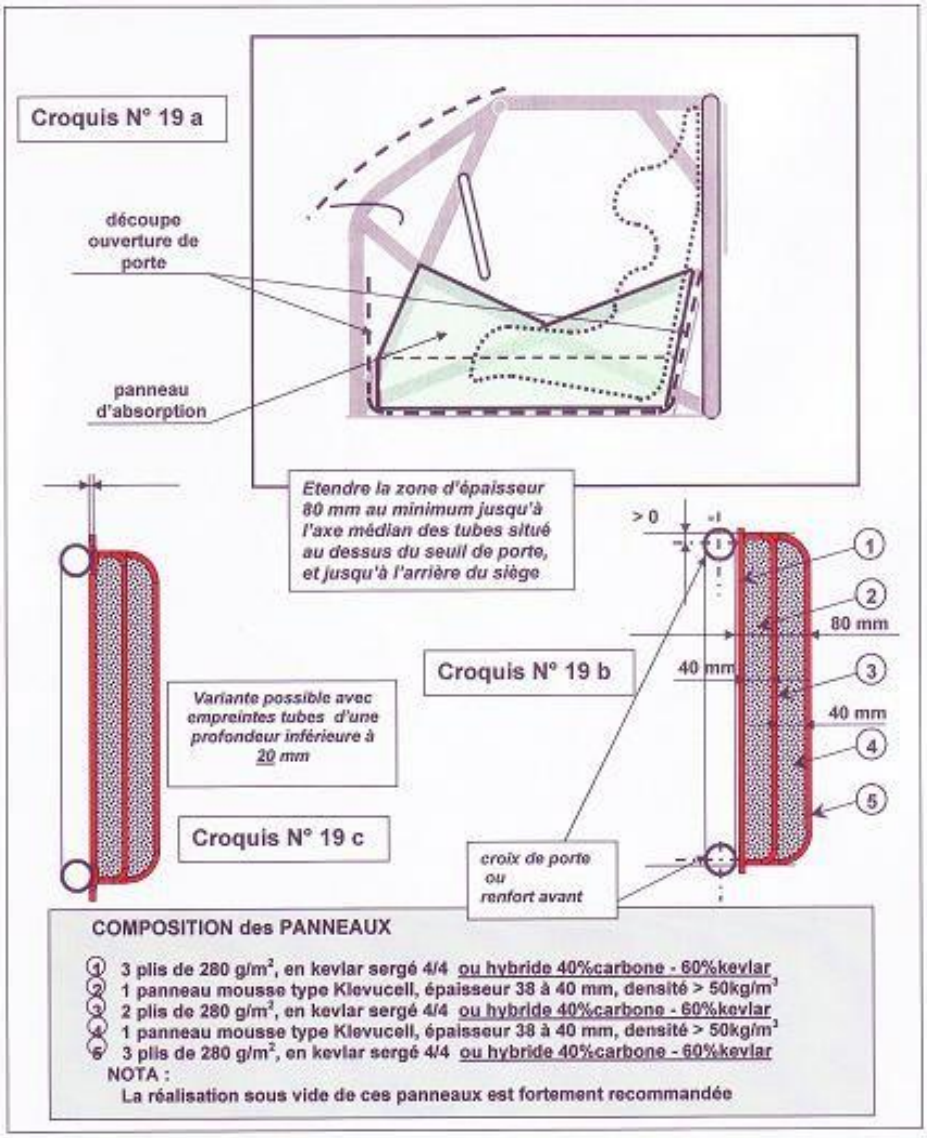
Croquis N° 19 a
découpe ouverture de porte
panneau d'absorption
Etendre la zone d'épaisseur 80 mm au minimum jusqu'à l'axe médian des tubes situé au dessus du seuil de porte, et jusqu'à l'arrière du siège
> 0
1
2
80 mm
3
40 mm
40 mm
4
5
Croquis N° 19 b
Variante possible avec empreintes tubes d'une profondeur inférieure à 20 mm
Croquis N° 19 c
croix de porte ou renfort avant
COMPOSITION des PANNEAUX
1 3 plis de 280 g/m², en kevlar sergé 4/4 ou hybride 40%carbone - 60%kevlar
2 1 panneau mousse type Klevucell, épaisseur 38 à 40 mm, densité > 50kg/m³
3 2 plis de 280 g/m², en kevlar sergé 4/4 ou hybride 40%carbone - 60%kevlar
4 1 panneau mousse type Klevucell, épaisseur 38 à 40 mm, densité > 50kg/m³
5 3 plis de 280 g/m², en kevlar sergé 4/4 ou hybride 40%carbone - 60%kevlar
NOTA :
La réalisation sous vide de ces panneaux est fortement recommandée

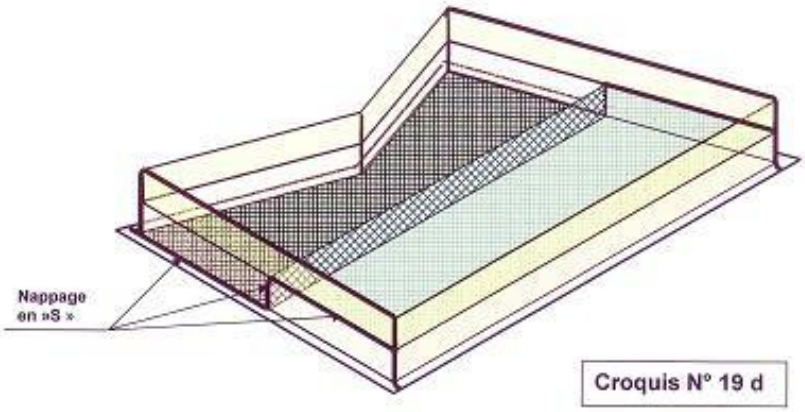

Croquis N° 19 d

VARIANTE DE CONSTRUCTION RECOMMANDÉE :

- **Afin d'améliorer la résistance longitudinale des panneaux, il est conseillé de diviser la première épaisseur de mousse Klévucell en 2 blocs et de réaliser un « nappage en S » au moyen d'une ou deux couches de tissu hybride 40% carbone-60% kevlar.**

Appendix 1: VT2 list of cars and related minimum weights

Einstufungsliste
VLN Produktionswagen Klasse VT2

Motor mit Aufladung max. Leistung 245 kW

Referenz-Leistungsgewicht (LG) 6,8 kg/ kW

Fahrzeuge mit Front/ Allrad- Antrieb

Bei Fahrzeugen mit Overboost-Funktion muss diese dauerhaft deaktiviert und diese geänderte Software zur Überprüfung bereitgestellt werden. Kennzeichnung Liste (1*)

Lfd. Nr.	Hersteller	Typ	Verkaufs-bezeichnung	TSN	Hubr. cm³	kW Serie	Soll-gewicht	Max. Kraftstoff-Volumen	LG	Sonstiges
1	Audi	8P	Audi S3	AIL	1984	195	1326	80	6,8	
2	Audi	8J	Audi TTS	AAU	1984	200	1360	80	6,8	
3	Ford	DYB	Focus ST	BFG	1999	184	1251	80	6,8	
4	Opel	AHC	Astra GTC	568	1988	177	1204	80	6,8	
5	Opel	AHC	Astra GTC	AEJ	1988	177	1204	80	6,8	
6	VW	1K	Golf GTI	AMI	1984	169	1149	80	6,8	
7	VW	IK	Golf R TSI	ARM	1984	199	1353	80	6,8	
8	VW	13	Scirocco R TSI	ARE	1984	195	1326	80	6,8	
9	Renault	1P	Megane	AUY	1998	184	1251	80	6,8	
10	Audi	8J	Audi TT	AAR	1984	147	1000	80	6,8	
11	Opel	P - J/SW	Astra GTC	AWI	1998	206	1400	80	6,80	
12	Alfa Romeo	940	Alfa Giulietta	BAS	1742	177	1204	80	6,8	
13	VW	1K	Golf GTI	ADF	1984	147	1000	80	6,8	
14	Renault	Z	Megane	BCS	1998	201	1367	80	6,8	
15	Renault	Z	Megane	AZG	1998	195	1326	80	6,8	
16	Hyundai Motor	PDE	I30N	AEX	1998	202 (1*)	1374	80	6,8	
17	Peugeot	GTI	308	AWH	1598	200	1360	80	6,8	
18	VW	AU	Golf	BYW	1984	195 (1*)	1326	80	6,8	
19	Mini		Mini	AEY	1598	160	1088	80	6,8	
20	Renault	RFB	Megane	BIL	1798	205	1394	80	6,8	

Seite 1 von 2 Nürburgring Langstrecken-Serie → **Einstufungsliste VLN-Produktionswagen Klasse VT2**

nürburgring LANGSTRECKEN SERIE

Einstufungsliste
VLN Produktionswagen **Klasse VT2**

VLN

21	Seat	Leon	Cupra	AJR	1984	206	1400	80	6,8	
22	Hyundai Motor	PDE	I30N	AFR	1998	206	1400	80	6,8	
23	BMW	F1H	128ti	CWN	1998	195	1326	80	6,8	
24	BMW / Mini	Mini	Cooper Works	CCR	1998	170	1156	80	6,8	
25	VW	13	Scirocco	BOY	1984	206	1400	80	6,8	
26	Seat	1P	Leon	ACY	1984	177	1204	80	6,8	
27	Cupra	KL	Leon	ARR	1984	221	1503	80	6,8	
28	VW	CD	Golf GTI	CMJ	1984	221	1503	80	6,8	
29	Toyota	Yaris	GR Yaris	APF	1618	192	1278	80	6,65	Allrad
30	Audi	GY	S3-Lim.	BXP	1984	228	1515	80	6,64	Allrad
31	Honda	FK 2	Civic Type R	AAY	1996	228	1550	80	6,8	
32	Audi	GY	S3-Lim.	CAY	1984	245	1630	80	6,65	Allrad

Stand 27.01.2025 Herm

Einstufungsliste
VLN Produktionswagen Klasse VT2

Motor mit Aufladung max. Leistung 219 kW

Referenz- Leistungsgewicht (LG) 7,4 kg/ kW

Fahrzeuge mit Heck- Antrieb

Bei Fahrzeugen mit Overboost-Funktion muss diese dauerhaft deaktiviert und diese geänderte Software zur Überprüfung bereitgestellt werden. Kennzeichnung Liste (1*)

Lfd. Nr.	Hersteller	Typ	Verkaufs-bezeichnung	TSN	Hubr. cm³	kW Serie	Soll-gewicht	Max. Kraftstoff-Volumen	LG	Zusätzliche Standzeit Sekunden
1	BMW	125i	1er Reihe	BLP	1997	160	1180	80	7,37	
2	BMW	3L	328i	BKV	1997	180	1340	80	7,44	
3	BMW	3L	328i	BHH	1997	180	1340	80	7,44	
4	BMW	1C	228i	BVS	1997	180	1350	80	7,50	
5	BMW	3L	330i	CDS	1998	185	1390	80	7,51	
6	BMW	G3L	330i	CTT	1996	190	1470	80	7,73	
7	Mercedes	204	C300	HTE	1991	190	1370	80	7,21	
8	BMW	125i	1er Reihe	BLX	1997	160	1180	80	7,37	
9	Toyota	JTSC	Supra	AOA	1998	190	1460	80	7,68	
10	Alpine	AAA	A110	AEF	1798	185	1380	80	7,45	
11	BMW	1K4	120i	CHX	1998	135	1200	80	8,88	

Stand: 27.01.2025 Her